K-PRAEZI DRG MANO HANSA

Precision pressure regulators

Caracteristici

Presiune de intrare	Max. 16 bar
Domeniu de temperaturi	-10 °C to +50 °C
Medii	Aer comprimat
Filet de conectare	Material: Die-cast zinc
Carcasă	Material: Grivory® (PA 66)
Membrană	NBR
Consum de aer propriu	2.6 l/min at P2 = 6 bar (depending on secondary pressure)
Măsurarea valorii debitului	At P1 = 10 bar, P2 = 6.3 bar and pressure drop Δp = 1 bar



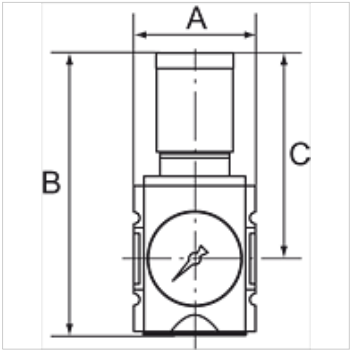

Indicaţie

Alte date sunt disponibile la cerere.

Descriere

Precision diaphragm pressure regulators with self-relieving design and excellent flow rates in modern design for applications requiring an extremely accurate working pressure. The regulator button can be latched and locked.

Indicaţii referitoare comandă

The price does not include a key lock. Please order separately.

Articol

Denumire	Filet	Domeniu de reglare	Debit (L/min)	A (mm)	B	C (mm)	Dimensiunea constructivă
K- 07 25 09 46	G 1/4	0.1 - 1 bar	2200	52,0	128,5 mm	95,5	1
K- 07 25 09 47	G 1/4	0.1 - 2 bar	2200	52,0	128,5 mm	95,5	1
K- 07 25 09 48	G 1/4	0.2 - 4 bar	2200	52,0	128,5 mm	95,5	1
K- 07 25 09 49	G 1/4	0.5 - 8 bar	2200	52,0	128,5 mm	95,5	1
K- 07 25 09 50	G 1/4	0.5 - 10 bar	2200	52,0	128,5 mm	95,5	1
K- 07 25 09 51	G 3/8	0.1 - 1 bar	2700	52,0	128,5 mm	95,5	1
K- 07 25 09 52	G 3/8	0.1 - 2 bar	2700	52,0	128,5 mm	95,5	1
K- 07 25 09 53	G 3/8	0.2 - 4 bar	2700	52,0	128,5 mm	95,5	1
K- 07 25 09 54	G 3/8	0.5 - 8 bar	2700	52,0	128,5 mm	95,5	1
K- 07 25 09 55	G 3/8	0.5 - 10 bar	2700	52,0	128,5 mm	95,5	1
K- 07 25 09 56	G 3/8	0.1 - 1 bar	4300	63,0	149,5 mm	110,0	2
K- 07 25 09 57	G 3/8	0.1 - 2 bar	4300	63,0	149,5 mm	110,0	2
K- 07 25 09 58	G 3/8	0.2 - 4 bar	4300	63,0	149,5 mm	110,0	2
K- 07 25 09 59	G 3/8	0.5 - 8 bar	4300	63,0	149,5 mm	110,0	2
K- 07 25 09 60	G 3/8	0.5 - 10 bar	4300	63,0	149,5 mm	110,0	2
K- 07 25 09 61	G 1/2	0.1 - 1 bar	5000	63,0	149,5 mm	110,0	2
K- 07 25 09 62	G 1/2	0.1 - 2 bar	5000	63,0	149,5 mm	110,0	2
K- 07 25 09 63	G 1/2	0.2 - 4 bar	5000	63,0	149,5 mm	110,0	2
K- 07 25 09 64	G 1/2	0.5 - 8 bar	5000	63,0	149,5 mm	110,0	2
K- 07 25 09 65	G 1/2	0.5 - 10 bar	5000	63,0	149,5 mm	110,0	2

Accesorii

K-STECKSCHLOSS	Key lock

Piese de schimb

K-HALTERBAUSATZ HANSA	Holder HANSA
K-SCHALTTAFELMUTTER HANSA	Nut HANSA
K-DICHTSATZ HANSA	Set of seals HANSA

În pofida controlului minuțios nu putem exclude eventualele informații eronate și nu garantăm pentru datele cuprinse.