K-WTEH 3-TLG MET TROPF MULTIFIX-MIN

Service units, 3-piece with metal bowl and metal sight dome

Caracteristici

Presiune de intrare	Max. 12 bar (also for metal tank!)
Temperatură mediu	max. 60 °C
Temperatură ambientală	Max. 60 °C
Mărimea porilor în elementul filtrant	5 µm
Material de etanşare	NBR
Apărătoare de arc	POM-brass
Carcasă	Die-cast zinc
Cap ungător	PA (polycarbonate bowl), Zinc-glass-NBR (metal bowl)
Drain valve	Semi-automatic
Măsurarea valorii debitului	At P1 = 8 bar, P2 = 6 bar and pressure drop Δp = 1 bar



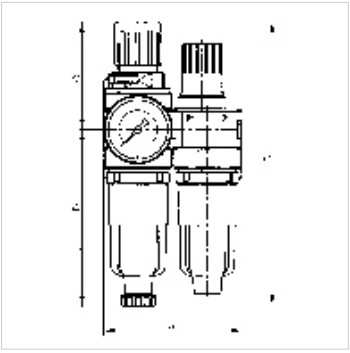

Indicaţie

Alte date sunt disponibile la cerere.

Descriere

Two or three-piece service units consisting of a diaphragm pressure regulator, independent of inlet pressure, with self-relieving design, combined with a centrifugal separator and a proportional lubricator.

Indicaţii referitoare comandă

Lockable service units available on request. If several devices in the »multifix-mini« Series are assembled together, the maximum working pressure is 12 bar.

Articol

Denumire	Filet	Domeniu de reglare	Debit (L/min)	A (mm)	B	C (mm)	D (mm)	DN	Dimensiunea constructivă
K- 07 25 01 07	G 1/8	0.5 - 10 bar	700	120,0	162,3 mm	63,0	99,3	5	0
K- 07 25 01 09	G 1/4	0.5 - 10 bar	700	120,0	162,3 mm	63,0	99,3	5	0

Piese de schimb

K-HALTERBAUSATZ	Holder
K-AUTOMAT ABLASSVENTIL	Automatic drain valve
K-SCHALTTAFELMUTTER	Nut
K-KOPPELPAKET MEHR	Coupling packet
K-PC-BEHAELTER FILTER MULTIFIX	Polycarbonate tank filter
K-ERSATZBEHAELTER MULTI MINI	Spare tank »multifix-mini« & »standard-mini«
K-VERSCHLEI-SATZ	Set of wearing parts
K-FILTERELEMENT	Filter element
K-TROPFAUFSATZ POLYCARBO 1	Drip attachment polycarbonate
K-TROPFAUFSATZ METALL	Drip attachment metal

În pofida controlului minuțios nu putem exclude eventualele informații eronate și nu garantăm pentru datele cuprinse.