K-FI REGL PC-BEHAEL MANO VARIOBLOC

Filter regulators with polycarbonate bowl and pressure gauge

Caracteristici

Presiune de intrare	Max. 16 bar (polycarbonate bowl), Max. 20 bar (metal bowl)
Temperatură mediu	max. 50 °C
Temperatură ambientală	Max. 50 °C (polycarbonate bowl), Max. 80 °C (metal bowl)
Mărimea porilor în elementul filtrant	40 µm
Material de etanşare	NBR
Apărătoare de arc	POM
Carcasă	Die-cast zinc
Membrană	NBR
Drain valve	Manual
Măsurarea valorii debitului	At P1 = 10 bar, P2 = 6 bar and pressure drop Δp = 1 bar



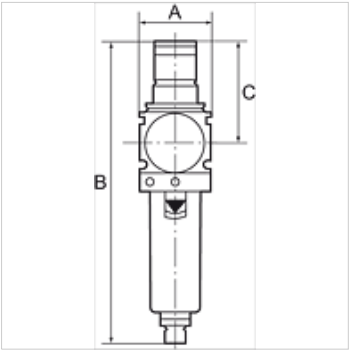

Indicaţie

Alte date sunt disponibile la cerere.

Descriere

Reversible diaphragm pressure regulators, independent of inlet pressure, with self-relieving design, combined with a centrifugal separator. The pressure setting can be locked by pushing the knob down. Approved series in modern industrial design, with the following key benefits: Simple handling, Convenient modular assembly thanks to innovative fasteners, Excellent flow values.

Indicaţii referitoare comandă

Filter regulators are also available with bowl guard or metal bowl. Filter regulators are also available in lockable version. Please ask for more information.

Informaţii suplimentare

Filter regulators are also available with bowl guard or metal bowl. Filter regulators are also available in lockable version. Please ask for more information.

Articol

Denumire	Filet	Domeniu de reglare	Debit (L/min)	A (mm)	B	C (mm)
K- 07 25 06 85	G 1/4	0.5 - 10 bar	2000	48,0	203,0 mm	68,0
K- 07 25 06 87	G 3/8	0.5 - 10 bar	3000	48,0	203,0 mm	68,0
K- 07 25 06 89	G 1/2	0.5 - 10 bar	5500	70,0	273,0 mm	98,0
K- 07 25 06 91	G 3/4	0.5 - 10 bar	6500	70,0	273,0 mm	98,0
K- 07 25 06 93	G 1	0.5 - 10 bar	6500	124,0	273,0 mm	98,0

Piese de schimb

K-VERSCHLEI-SATZ VARIOBLOC	Set of wearing parts
K-ERSATZBEHAELTER VARIOBLOC POLY	Spare tank Polycarbonat
K-FILTERELEMENT VARIOBLOC	Filter element
K-ABLASSVENTIL AUTO	Fully-automatic drain valve with Adapter G 1/8

În pofida controlului minuţios nu putem exclude eventualele informaţii eronate şi nu garantăm pentru datele cuprinse.