K-NEBELOELER PC-BEHAELTER VARIOBLOC

Oil-mist lubricators with polycarbonate bowl

HANSA FLEX

Caracteristici

Presiune de intrare	Max. 16 bar (polycarbonate bowl), Max. 20 bar (metal bowl)
Temperatură mediu	max. 50 °C
Temperatură ambientală	Max. 50 °C (polycarbonate bowl), Max. 80 °C (metal bowl)
Material de etanşare	NBR
Carcasă	Die-cast zinc
Cap ungător	PA
Sortiment de ulei	CL 32 acc. to DIN 51517 - ISO VG 32
Măsurarea valorii debitului	At P1 = 6 bar and pressure drop Δp = 1 bar



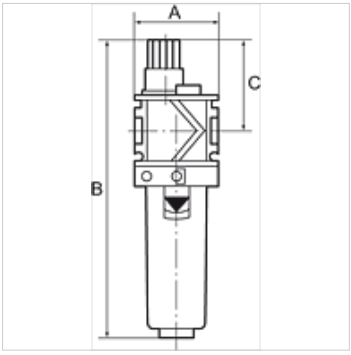

Indicaţie

Alte date sunt disponibile la cerere.

Descriere

Proportional lubricators, oil can be filled under pressure. Approved series in modern industrial design, with the following key benefits: Simple handling, Convenient modular assembly thanks to innovative fasteners, Excellent flow values.

Indicaţii referitoare comandă

Oil-mist lubricators are also available with bowl guard or metal bowl.

Articol

Denumire	Filet	Debit (L/min)	A (mm)	B	C (mm)
K- 07 25 09 13	G 1/4	3400	48,0	171,0 mm	52,0
K- 07 25 09 15	G 3/8	4400	48,0	171,0 mm	52,0
K- 07 25 09 17	G 1/2	4600	70,0	224,0 mm	57,0
K- 07 25 09 19	G 3/4	7500	70,0	224,0 mm	57,0
K- 07 25 09 21	G 1	7500	124,0	224,0 mm	57,0

Piese de schimb

K-ERSATZBEHAELTER VARIOBLOC POLY	Spare tank Polycarbonat
K-TROPFAUFSATZ VARIOBLOC	Drip attachment
K-TROPFAUFSATZ METALL	Drip attachment metal

În pofida controlului minuțios nu putem exclude eventualele informații eronate și nu garantăm pentru datele cuprinse.