# K-WTEH 2-TLG MET SICH TROPF VARIOBL

Service units, 2-piece with metal bowl, incl. sight glass and metal sight dome

## Caracteristici

| | |
|---|---|
| **Presiune de intrare** | Max. 16 bar (polycarbonate bowl), Max. 20 bar (metal bowl) |
| **Temperatură mediu** | max. 50 °C |
| **Temperatură ambientală** | Max. 50 °C (polycarbonate bowl), Max. 80 °C (metal bowl) |
| **Mărimea porilor în elementul filtrant** | 40 µm |
| **Material de etanşare** | NBR |
| **Apărătoare de arc** | POM |
| **Carcasă** | Die-cast zinc |
| **Membrană** | NBR |
| **Cap ungător** | PA |
| **Drain valve** | Manual |
| **Măsurarea valorii debitului** | At P1 = 10 bar, P2 = 6 bar and pressure drop Δp = 1 bar |



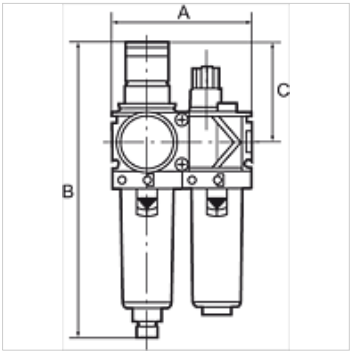


## Indicaţie

Alte date sunt disponibile la cerere.

## Descriere

Two or three-piece service units consisting of a reversible diaphragm pressure regulator, independent of inlet pressure, with self-relieving design, combined with a centrifugal separator and a proportional lubricator. Approved series in modern industrial design, with the following key benefits: Simple handling, Convenient modular assembly thanks to innovative fasteners, Excellent flow values.

## Indicaţii referitoare comandă

Service units are also available with bowl guard or metal bowl. Service units are also available in other control ranges (0.5 - 6 bar and 0.5 - 16 bar) and in lockable version. Please ask for more information.

## Informaţii suplimentare

Service units are also available with bowl guard or metal bowl. Service units are also available in other control ranges.

## Articol

| Denumire | Filet | Domeniu de reglare | Debit (L/min) | A (mm) | B | C (mm) |
|---|---|---|---|---|---|---|
| **K- 07 25 13 86** | G 1/4 | 0.5 - 10 bar | 1500 | 96,0 | 203,0 mm | 68,0 |
| **K- 07 25 13 88** | G 3/8 | 0.5 - 10 bar | 1800 | 96,0 | 203,0 mm | 68,0 |
| **K- 07 25 13 90** | G 1/2 | 0.5 - 10 bar | 3400 | 140,0 | 273,0 mm | 98,0 |
| **K- 07 25 13 92** | G 3/4 | 0.5 - 10 bar | 5000 | 140,0 | 273,0 mm | 98,0 |
| **K- 07 25 13 94** | G 1 | 0.5 - 10 bar | 5000 | 194,0 | 273,0 mm | 98,0 |

## Piese de schimb

| | |
|---|---|
| **K-VERSCHLEI-SATZ VARIOBLOC** | Set of wearing parts |
| **K-FILTERELEMENT VARIOBLOC** | Filter element |
| **K-ERSATZBEHAELTER VARIOBLOC POLY** | Spare tank Polycarbonat |
| **K-TROPFAUFSATZ VARIOBLOC** | Drip attachment |
| **K-ABLASSVENTIL AUTO** | Fully-automatic drain valve with Adapter G 1/8 |

*În pofida controlului minuțios nu putem exclude eventualele informații eronate și nu garantăm pentru datele cuprinse.*