K-HS RD

Unidirectional banjo valves, pneumatic release, port 2 with female thread

Caracteristici

Presiune de lucru	0.3 - 10 bar
Presiune de comandă	0.5 - 2.5 bar, depending on operating pressure
Temperatură mediu	max. 60 °C
Poziţie de montare	Any. The ring piece must be positioned before the valve is tightened
Material	Alamă nichelată
Material de etanşare	Perbunan



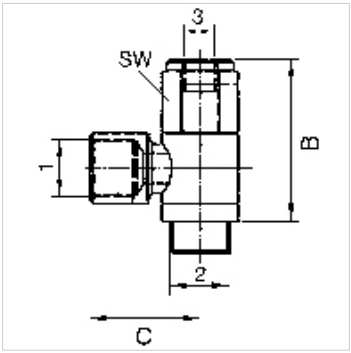

Indicaţie

Alte date sunt disponibile la cerere.

Descriere

For stopping and positioning the cylinder movement: If a control signal is present at port 3 (see drawing), air can flow to and from the cylinder. If no control signal is present, the cylinder exhaust air is shut off by the unidirectional valve.
The cylinder is stopped. Releasable unidirectional valves are screwed directly onto the cylinder instead of the normal pipe connections.

Articol

Denumire	Port 1	Port 2	Conexiunea 3	B (mm)	C (mm)
K- 07 15 07 04	G 1/8	G 1/8	M 5	38,0	21,5
K- 07 15 07 03	G 1/4	G 1/4	G 1/8	43,0	25,4
K- 07 15 07 05	G 3/8	G 3/8	G 1/8	46,0	31,6
K- 07 15 07 02	G 1/2	G 1/2	G 1/8	52,0	32,0

În pofida controlului minuțios nu putem exclude eventualele informații eronate și nu garantăm pentru datele cuprinse.