# K-INLINE-DRG IG WASSER O SEKUNDAER

Inline pressure regulators, for water applications

## Caracteristici

| | |
|---|---|
| **Presiune de lucru** | max. 10 bari |
| **Domeniu de temperaturi** | 0 °C to +60 °C |
| **Debit** | 4000 ml/min with 0.8 bar pressure loss |
| **Carcasă** | Nickel-plated brass |
| **restul pieselor** | CR, stainless steel |



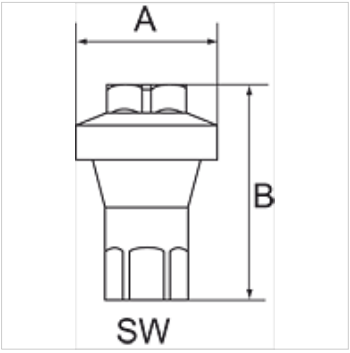


## Indicaţie

Alte date sunt disponibile la cerere.

## Descriere

This water regulator is designed as a single-acting diaphragm regulator for installation in any water pipe system. It supplies a precise output value regardless of the input pressure. Since the pressure is preset in the factory and cannot be altered, the product is also tamper-proof. <br>The regulator protects all downstream devices and components in the water pipe by maintaining a required constant pressure and preventing system pressure fluctuations. In combination with a nozzle, it is ideally suited for cooling or cleaning with water spray or mist.

## Articol

| Denumire | Filet | Presiune de lucru setată în prealabil | A (mm) | B | SW (mm) |
|---|---|---|---|---|---|
| **K- 07 25 03 06** | G 1/4 | 1 bar | 34,0 | 51,0 mm | 17 |
| **K- 07 25 03 07** | G 1/4 | 2 bar | 34,0 | 51,0 mm | 17 |
| **K- 07 25 03 08** | G 1/4 | 3 bar | 34,0 | 51,0 mm | 17 |
| **K- 07 25 03 09** | G 1/4 | 4 bar | 34,0 | 51,0 mm | 17 |

*În pofida controlului minuțios nu putem exclude eventualele informații eronate și nu garantăm pentru datele cuprinse.*