K-SCHALLDAE SINTERBR SK

Silencers, sintered bronze, with hexagon nut

Caracteristici

Presiune de lucru	0 - 8 bar
Temperatura de lucru	-10 °C to +250 °C
Nivel de zgomot 6 bari	71 ~ 108 dB(A)



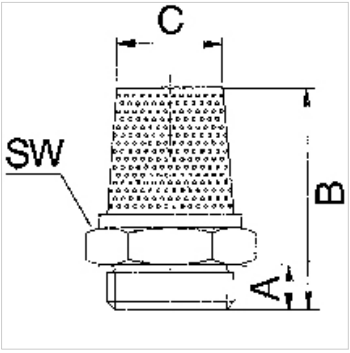

Indicaţie

Alte date sunt disponibile la cerere.

Descriere

For reducing the exhaust noise generated by pneumatic equipment.

Articol

Denumire	Filet	A (mm)	B (mm)	C (mm)	Deschiderea cheii fixe
K- 07 40 34 77	G 1/8	6,0	28,0	8,0	13 mm
K- 07 40 34 78	G 1/4	8,0	34,0	12,0	17 mm
K- 07 40 34 79	G 3/8	10,0	36,0	15,0	22 mm
K- 07 40 34 80	G 1/2	12,0	44,0	19,0	27 mm
K- 07 40 34 81	G 3/4	14,0	54,0	22,0	32 mm
K- 07 40 34 82	G 1	16,0	66,0	28,0	41 mm

În pofida controlului minuțios nu putem exclude eventualele informații eronate și nu garantăm pentru datele cuprinse.