K-SCHL-AUFROLLER LU WA S

Hose reels for compressed air and water, heavy-duty type

Caracteristici

Material furtun	Polyurethane
Presiune de lucru	max. 10 bari
Temperatura de lucru	-10 °C to +40 °C
Fixare	Wall, floor or ceiling
Intrare	Hose stem 8 mm



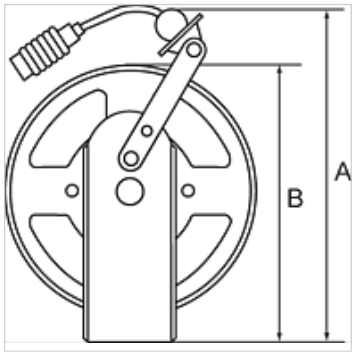

Indicaţie

Alte date sunt disponibile la cerere.

Descriere

Heavy-duty steel design for industrial applications. Blue, powder-coated housing. An automatic latching mechanism allows the hose to be engaged at any length. Enclosed spring. Precise locking device for continuous feeding or latching mechanism. Reel guide prevents excessive wear on the hose.

Articol

Denumire	Dimensiune furtun	A (mm)	B (mm)	Lungime furtun (m)
K- 07 10 06 24	10 mm x 6,5 mm	420,0	353,0	10
K- 07 10 06 25	10 mm x 6,5 mm	420,0	353,0	20
K- 07 10 06 26	12 mm x 8 mm	420,0	353,0	15
K- 07 10 06 27	16 mm x 11 mm	420,0	353,0	15

În pofida controlului minuțios nu putem exclude eventualele informații eronate și nu garantăm pentru datele cuprinse.