K-ZFL ABSP-KLAPPEN DOPPEL

Butterfly valves, with double-acting actuator, min. pilot pressure 5 bar

HANSA FLEX

Caracteristici

Tip constructiv	Pneumatic actuators, in double- or single acting version
Presiune de lucru	Max. 16 bar
Temperatura de lucru	-15 °C to +120 °C
Medii	Water / steam, salt water, salt water, ester, ketone, alkali, caustic soda, sodium hydroxide. Not recommended for hydrocarbons
Presiune de comandă	5.5 bar
Adaptor supapă	Supplied as standard, operated by a 3/2- or 5/2-way valve
Unghi de rotaţie	90 °
Antrenare	aluminium eloxed
Garnitură de antrenare	NBR
Carcasă	Grey cast iron GG25 epoxy resin coated, RAL 5015
Garnitură de etanşare	EPDM
Arbore	SS416
Etanşare pe arbore	EPDM
Comandă	



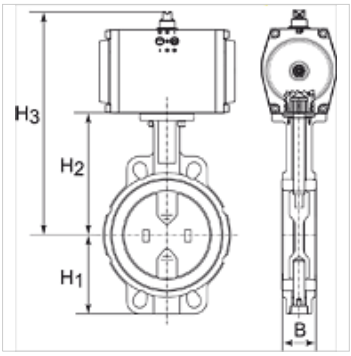

Indicaţie

Alte date sunt disponibile la cerere.

Articol

Denumire	Şaibă	DN	B (mm)	H1 (mm)	H2 (mm)	H3 (mm)	L (mm)
K- 07 30 03 28	Stainless Steel CF8M/1.4404	40	38,0	68,0	108,0	212,0	94,0
K- 07 30 03 29	Stainless Steel CF8M/1.4404	50	47,0	71,0	143,0	247,0	100,0
K- 07 30 03 30	Stainless Steel CF8M/1.4404	65	49,0	78,0	155,0	259,0	115,0
K- 07 30 03 31	Stainless Steel CF8M/1.4404	80	47,0	89,0	162,0	280,0	127,0
K- 07 30 03 32	Stainless Steel CF8M/1.4404	100	56,0	102,0	178,0	308,0	163,0
K- 07 30 03 33	Stainless Steel CF8M/1.4404	125	59,0	123,0	191,0	321,0	190,0
K- 07 30 03 35	Stainless Steel CF8M/1.4404	150	59,0	138,0	205,0	352,0	216,0

În pofida controlului minuţios nu putem exclude eventualele informaţii eronate şi nu garantăm pentru datele cuprinse.