K-WTEH 3-TLG PC SCHU WAND V G

Service units, 3-piece with polycarbonate bowl, bowl guard and joiner for wall mounting, fully-automatic drain valve

Caracteristici

Presiune de intrare	Max. 10 bar
Temperatură mediu	max. 70 °C
Temperatură ambientală	Max. 70 °C
Mărimea porilor în elementul filtrant	5 µm
Material de etanşare	NBR
Apărătoare de arc	POM
Carcasă	Die-cast aluminium
Cap ungător	Brass/POM
Drain valve	Semi- or fully-automatic
Măsurarea valorii debitului	At P1 = 8 bar, P2 = 6 bar and pressure drop Δp = 1 bar
Alte date	User manual on request

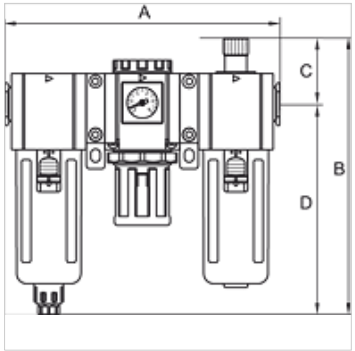

Articol

Denumire	Filet	Domeniu de reglare	Debit (L/min)	A (mm)	B	C (mm)	D (mm)	Dimensiunea constructivă
K- 07 25 14 22	G 1/4	1.5 - 9 bar	1100	179,0	187,0 mm	44,0	143,0	300
K- 07 25 14 24	G 3/8	1.5 - 9 bar	1400	179,0	187,0 mm	44,0	143,0	300
K- 07 25 14 26	G 1/2	1.5 - 9 bar	1400	179,0	187,0 mm	44,0	143,0	300
K- 07 25 14 28	G 3/8	1.5 - 9 bar	2950	236,0	214,5 mm	48,0	166,5	400
K- 07 25 14 30	G 1/2	1.5 - 9 bar	2950	236,0	214,5 mm	48,0	166,5	400

Accesorii

K-VERSCHLEI-SATZ	Set of wearing parts
K-ERSATZMEMBRANE	Replacement diaphragm
K-ADAPTERPLATTEN HANSA	Adapter plate HANSA
K-SCHUTZKORB G	Protective cage
K-FILTERELEMENT	Filter element
K-ERSATZBEHAELTER G UND G-MINI POLY	Spare tanks »G« Series and »G-mini« Series Polycarbonat
K-VERBINDUNGELEMENTE	Connecting sets
K-WANDHALTER	Wall bracket

În pofida controlului minuțios nu putem exclude eventualele informații eronate și nu garantăm pentru datele cuprinse.