K-NEBELOELER PC-BEHAELTER HW G

Oil-mist lubricators with polycarbonate bowl, bowl guard and »HW« mounting bracket

Caracteristici

Presiune de intrare	Max. 10 bar
Temperatură mediu	max. 70 °C
Temperatură ambientală	Max. 70 °C
Presiune de lucru	0.5 - 9 bar
Material de etanşare	NBR
Apărătoare de arc	POM
Carcasă	Die-cast aluminium
Cap ungător	Brass/POM
Măsurarea valorii debitului	At P1 = 8 bar, P2 = 6 bar and pressure drop Δp = 1 bar
Alte date	User manual on request



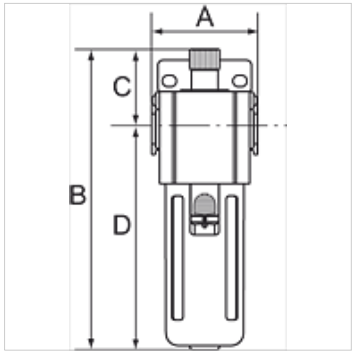

Articol

Denumire	Filet	Debit (L/min)	A (mm)	B	C (mm)	D (mm)	Dimensiunea constructivă
K- 07 25 08 68	G 1/4	2200	51,0	169,0 mm	44,0	125,0	300
K- 07 25 08 69	G 3/8	2650	51,0	169,0 mm	44,0	125,0	300
K- 07 25 08 70	G 1/2	2650	51,0	169,0 mm	44,0	125,0	300
K- 07 25 08 71	G 3/8	7500	68,0	190,0 mm	48,0	142,0	400
K- 07 25 08 72	G 1/2	7500	68,0	190,0 mm	48,0	142,0	400

Accesorii

K-ERSATZBEHAELTER G UND G-MINI POLY	Spare tanks »G« Series and »G-mini« Series Polycarbonat
K-HALTERBAUSATZ	Holder
K-VERBINDUNGELEMENTE	Connecting sets
K-WANDHALTER	Wall bracket

În pofida controlului minuțios nu putem exclude eventualele informații eronate și nu garantăm pentru datele cuprinse.