K-WTEH 3-TLG PC SCHU VARIOBLOC

Service units, 3-piece with polycarbonate bowl and bowl guard

Caracteristici

Presiune de intrare	Max. 16 bar (polycarbonate bowl), Max. 20 bar (metal bowl)
Temperatură mediu	max. 50 °C
Temperatură ambientală	Max. 50 °C (polycarbonate bowl), Max. 80 °C (metal bowl)
Mărimea porilor în elementul filtrant	40 µm
Material de etanşare	NBR
Apărătoare de arc	POM
Carcasă	Die-cast zinc
Membrană	NBR
Cap ungător	PA
Drain valve	Manual
Măsurarea valorii debitului	At P1 = 10 bar, P2 = 6 bar and pressure drop Δp = 1 bar



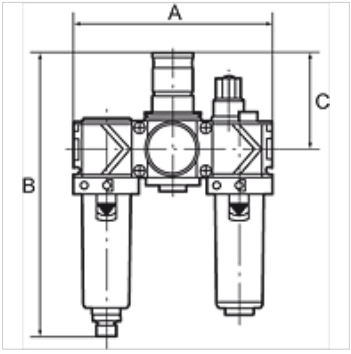

Indicaţie

Alte date sunt disponibile la cerere.

Descriere

Two or three-piece service units consisting of a reversible diaphragm pressure regulator, independent of inlet pressure, with self-relieving design, combined with a centrifugal separator and a proportional lubricator. Approved series in modern industrial design, with the following key benefits: Simple handling, Convenient modular assembly thanks to innovative fasteners, Excellent flow values.

Indicaţii referitoare comandă

Service units are also available with bowl guard or metal bowl. Service units are also available in other control ranges (0.5 - 6 bar and 0.5 - 16 bar) and in lockable version. Please ask for more information.

Informaţii suplimentare

Service units are also available with bowl guard or metal bowl. Service units are also available in other control ranges.

Articol

Denumire	Filet	Domeniu de reglare	Debit (L/min)	A (mm)	B	C (mm)
K- 07 25 22 86	G 1/4	0.5 - 10 bar	1500	144,0	201,0 mm	68,0
K- 07 25 22 85	G 3/8	0.5 - 10 bar	1800	144,0	201,0 mm	68,0
K- 07 25 22 84	G 1/2	0.5 - 10 bar	3400	210,0	247,0 mm	98,0
K- 07 25 22 83	G 3/4	0.5 - 10 bar	5000	210,0	247,0 mm	98,0
K- 07 25 22 82	G 1	0.5 - 10 bar	5000	264,0	247,0 mm	98,0

În pofida controlului minuțios nu putem exclude eventualele informații eronate și nu garantăm pentru datele cuprinse.