# K-BKR ELK 230 VAC MS

Brass ball valves with electric actuator 230 VAC, 50 Hz

## Caracteristici

| | |
|---|---|
| **Presiune de lucru** | DN 15 - DN 32: max. 40 bar; DN 40 - DN 50: max. 25 bar |
| **Temperatura de lucru** | -20 °C to +70 °C |
| **Durată de comutare** | ED 30 % |
| **Umiditatea aerului** | 30 % to 95 % |
| **Poziţii de cuplare** | Manually operated |
| **Clasa de protecţie** | IP 67 |
| **Timp de reglare** | 13 sec. = 230 VAC, 50 Hz<br>15 sec. = 24 VDC |
| **Temperatură ambientală** | -30 °C to +70 °C |
| **Flanşă de asamblare** | ISO 5211 |
| **Carcasă** | Aluminium, powder-coated |
| **Ventil cu bilă** | brass nickel plated |
| **Bilă, ax de comandă** | Chrome-plated brass |
| **Etanşare bilă** | PTFE, glass fibre-reinforced |
| **Garnitură ax de comandă** | FKM |



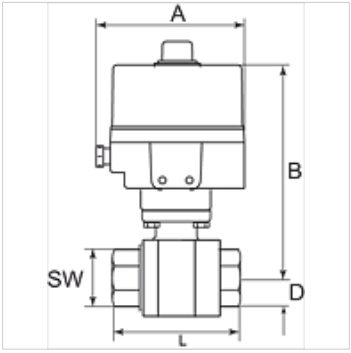


## Indicaţie

Alte date sunt disponibile la cerere.

## Descriere

Voltage range 230 VAC, 50 Hz or 24 VDC. 2-way cock, full bore, for neutral gases and liquids. <br>Reversible electric rotary actuator.

## Articol

| Denumire | DN | Filet | A (mm) | B (mm) | D (mm) | L (mm) | SW (mm) |
|---|---|---|---|---|---|---|---|
| **K- 07 30 20 64** | 15 | Rp 1/2 | 152,0 | 189,0 | 17,0 | 75,0 | 26 |
| **K- 07 30 20 65** | 20 | Rp 3/4 | 152,0 | 192,0 | 20,0 | 80,0 | 32 |
| **K- 07 30 20 66** | 25 | Rp 1 | 152,0 | 195,0 | 25,0 | 90,0 | 41 |
| **K- 07 30 20 67** | 32 | Rp 1 1/4 | 152,0 | 206,0 | 30,0 | 110,0 | 50 |
| **K- 07 30 20 68** | 40 | Rp 1 1/2 | 152,0 | 213,0 | 36,0 | 120,0 | 55 |
| **K- 07 30 20 69** | 50 | Rp 2 | 152,0 | 224,0 | 45,0 | 140,0 | 70 |

*În pofida controlului minuțios nu putem exclude eventualele informații eronate și nu garantăm pentru datele cuprinse.*