K-FI AK KOH PC-BEHAEL VARIOBLOC

Activated carbon filters with polycarbonate bowl

Caracteristici

Presiune de intrare	Max. 16 bar (polycarbonate bowl), Max. 20 bar (metal bowl)
Temperatură mediu	max. 50 °C
Temperatură ambientală	Max. 50 °C (polycarbonate bowl), Max. 80 °C (metal bowl)
Calitatea aerului ISO 85731	Class 1 dirt, class 1 oil
Conţinut de ulei rezidual	0,003 mg/m3
Măsurarea valorii debitului	At P1 = 7 bar and pressure drop Δp = 0,1 bar



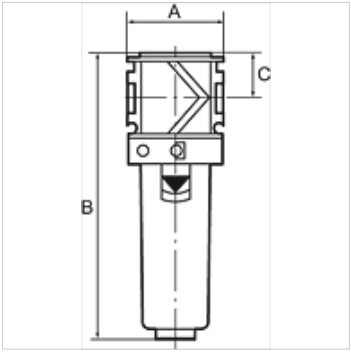

Indicaţie

Activated carbon filters are also supplied with protective cage or metal container.
Alte date sunt disponibile la cerere.

Descriere

The activated carbon filter absorbs oil vapour from the compressed air. The entering compressed air needs to be dry and free of contaminants (an upstream microfilter is strongly recommended).

Articol

Denumire	Filet	Debit (L/min)	A (mm)	B	C (mm)
K- 07 25 19 59	G 1/4	800	48,0	142,0 mm	22,0
K- 07 25 19 60	G 3/8	1000	48,0	142,0 mm	22,0
K- 07 25 19 61	G 1/2	1200	70,0	193,0 mm	26,0
K- 07 25 19 62	G 3/4	1300	70,0	193,0 mm	26,0
K- 07 25 19 63	G 1	1300	124,0	193,0 mm	26,0

În pofida controlului minuțios nu putem exclude eventualele informații eronate și nu garantăm pentru datele cuprinse.