K-DRUCKVERST MANO H SCHALLD W VBA

Booster Regulator, pressure gauge, elbow high-noise reduction silencer, VBA

Caracteristici

Execuţie	with pressure gauge and with high performance muffler, angled
Presiune de lucru min.	0.20 MPa
Racord manometru pneumatic	Rc 1/8
Număr racord manometru pneumatic	2
Presiune de intrare max.	0,1 to 1,0 MPa
Temperatură mediu	+2 °C to +50 °C
Temperatură ambientală	+2 °C bis +50 °C
Medii	Aer comprimat

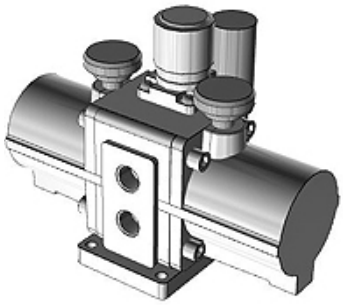

Descriere

Booster regulator, series VBA, increases pressure only where the force is inadequate because of a low network pressure (energy saving measure), no electricity supply necessary, longer service life: doubled compared to conventional model, lower operating noise level: 13 dB (A), improved operational reliability from inbuilt mesh filter on (IN connection) compressed air inlet, reduced condensation levels: air exhaust channels integrated directly into the cylinder tube, suitable for: compressed air, size 1/4, with pressure gauge and silencer, elbow, pneumatic connection: G 1/4, pneumatic connection pressure gauge: G 1/8, pneumatic connections pressure gauge: 2, flow rate 230 l/min, pressure boost 1:2, manually actuated pressure adjustment mechanism, test pressure: 3 MPa, max. operating pressure: 2 MPa, min. operating pressure: 0.2 MPa, media temperature: +2 to +50 °C, ambient temperature: +2 to +50 °C

Articol

Denumire	Racord pneumatic	Dimensiunea constructivă	Mecanism de reglare a presiunii	Raport de intensificare a tensiunii	Debit (L/min)	presiune max. de lucru (MPa)
K- 07 60 00 04	G 1/4	1/4	manually operated	1:2	230	3,00

În pofida controlului minuţios nu putem exclude eventualele informaţii eronate şi nu garantăm pentru datele cuprinse.