K-BKR EINTEILIG VA

Ball valves

Свойства

Рабочее давление	max. 55 bar (depending on connection size and temperature)
Рабочая температура	Max. 150 °C
Уплотнение	PTFE
Рукоятка	Stainless steel 1.4301

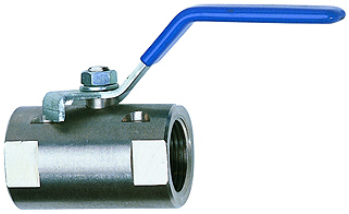

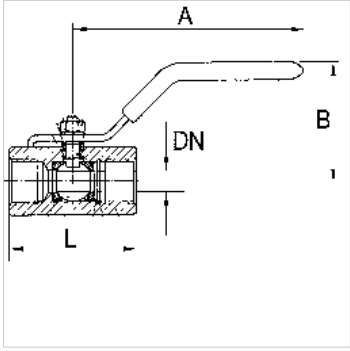

Указание

G thread acc. to DIN EN ISO 228-1, with ISO flange plate (acc. to ISO 5211)
Прочие данные только по запросу.

Описание

Full bore with G 1/4 to G 3/8, reduced bore with G 1/2 to G 2

Указания по заказу

For use on devices that have to be vented whenever they are turned off, either because of safety regulations or for technical reasons. The pneumatic devices are disconnected from the system and simultaneously vented each time they are shut off.

Изделие

Наименование	DN	Резьба	A (mm)	B (mm)	L (mm)	Материал
K- 07 30 14 94	5	G 1/4	60,0	30,0	39,8	Stainless steel 1.4401/1.4408
K- 07 30 14 95	7	G 3/8	80,0	33,0	44,8	Stainless steel 1.4401/1.4408
K- 07 30 14 96	9	G 1/2	110,0	57,0	56,5	Stainless steel 1.4401/1.4408
K- 07 30 14 97	13	G 3/4	110,0	61,0	60,0	Stainless steel 1.4401/1.4408
K- 07 30 14 98	15	G 1	124,0	70,0	70,0	Stainless steel 1.4401/1.4408
K- 07 30 14 99	20	G 1 1/4	152,0	75,0	77,6	Stainless steel 1.4401/1.4408
K- 07 30 15 00	25	G 1 1/2	150,0	80,0	87,0	Stainless steel 1.4401/1.4408
K- 07 30 15 01	32	G 2	155,0	85,0	102,0	Stainless steel 1.4401/1.4408

Несмотря на тщательную проверку мы не может исключить ошибки, поэтому мы не берем на себя ответственность за содержащуюся информацию.