# VRK VA

Nákrutka pre naskrutkovanie

HANSA-FLEX

## Vlastnosti

| | |
|---|---|
| **Prípojka 1** | Vonkajší závit kužeľový BSPT |
| **Tvar tesnenia 1** | tesniaci závit |
| **Prípojka 2** | metrický vonkajší závit valcový |
| **Tvar tesnenia 2** | Vnútorný kužeľ 24° |
| **Konštrukcia** | Nákrutka pre naskrutkovanie |
| **Vyhotovenie** | priame |
| **Norma** | DIN 2353<br>ISO 8434-1 |
| **Rozsah dodávky** | Hrdlo s presuvnou maticou a zárezným krúžkom |
| **Materiál** | Ušľachtilá oceľ |



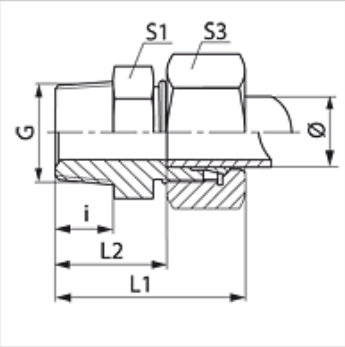


## Poznámka

Pokyny pre montáž, zabudovanie, tlakové zaťaženie a povolené prevádzkové teploty nájdete v technických informáciách pre fitingové nákrutky

## Výrobok

| Označenie | Konštrukčný rad | Prevádzkový tlak | Rúrka, vonkajší Ø (mm) | G | i (mm) | L1 (mm) | L2 (mm) | S1 | S3 |
|---|---|---|---|---|---|---|---|---|---|
| **VR 04 LL VA** | LL | PN 100 | 4 | R 1/8" K | 8 | 26 | 16,0 | 11 | 10 |
| **VR 06 LL VA** | LL | PN 100 | 6 | R 1/8" K | 8 | 26 | 14,5 | 11 | 12 |
| **VR 06 LL 1/4 VA** | LL | PN 100 | 6 | R 1/4" K | 12 | 26 | 14,5 | 12 | 12 |
| **VR 08 LL VA** | LL | PN 100 | 8 | R 1/8" K | 8 | 28 | 16,5 | 12 | 14 |
| **VR 08 LL 1/4 VA** | LL | PN 100 | 8 | R 1/4" K | 13 | 33 | 21,5 | 17 | 14 |
| | | | | | | | | | |
| **VRK NW 04 HL VA** | D | PN 315 | 6 | R 1/8" K | 10 | 32 | 17,0 | 12 | 14 |
| **VRK NW 04 HL 1/4 VA** | D | PN 315 | 6 | R 1/4" K | 13 | 36 | 21,0 | 17 | 14 |
| **VRK NW 04 HL 3/8 VA** | D | PN 315 | 6 | R 3/8" K | 12 | 36 | 21,0 | 17 | 14 |
| **VRK NW 04 HL 1/2 VA** | D | PN 315 | 6 | R 1/2" K | 14 | 27 | 12,0 | 22 | 14 |
| **VRK NW 06 HL 1/8 VA** | D | PN 315 | 8 | R 1/8" K | 8 | 31 | 16,0 | 14 | 17 |
| **VRK NW 06 HL VA** | D | PN 315 | 8 | R 1/4" K | 13 | 36 | 21,0 | 17 | 17 |
| **VRK NW 06 HL 3/8 VA** | D | PN 315 | 8 | R 3/8" K | 12 | 36 | 21,0 | 19 | 17 |
| **VRK NW 06 HL 1/2 VA** | D | PN 315 | 8 | R 1/2" K | 14 | 38 | 23,0 | 22 | 17 |
| **VRK NW 08 HL 1/8 VA** | D | PN 315 | 10 | R 1/8" K | 10 | 26 | 19,0 | 17 | 19 |
| **VRK NW 08 HL VA** | D | PN 315 | 10 | R 1/4" K | 13 | 37 | 22,0 | 17 | 19 |
| **VRK NW 08 HL 3/8 VA** | D | PN 315 | 10 | R 3/8" K | 12 | 37 | 22,0 | 19 | 19 |
| **VRK NW 08 HL 1/2 VA** | D | PN 315 | 10 | R 1/2" K | 14 | 39 | 24,0 | 22 | 19 |
| **VRK NW 10 HL 1/8 VA** | D | PN 315 | 12 | R 1/8" K | 8 | 32 | 17,0 | 19 | 22 |
| **VRK NW 10 HL 1/4 VA** | D | PN 315 | 12 | R 1/4" K | 13 | 38 | 23,0 | 19 | 22 |
| **VRK NW 10 HL VA** | D | PN 315 | 12 | R 3/8" K | 13 | 38 | 23,0 | 19 | 22 |
| **VRK NW 10 HL 1/2 VA** | D | PN 315 | 12 | R 1/2" K | 16 | 41 | 26,0 | 24 | 22 |
| **VRK NW 10 HL 3/4 VA** | D | PN 315 | 12 | R 3/4" K | 16 | 42 | 27,5 | 27 | 22 |
| **VRK NW 13 HL 1/4 VA** | D | PN 315 | 15 | R 1/4" K | 12 | 37 | 22,0 | 24 | 27 |
| **VRK NW 13 HL 3/8 VA** | D | PN 315 | 15 | R 3/8" K | 13 | 39 | 24,0 | 24 | 27 |
| **VRK NW 13 HL VA** | D | PN 315 | 15 | R 1/2" K | 16 | 42 | 27,0 | 24 | 27 |
| **VRK NW 13 HL 3/4 VA** | D | PN 315 | 15 | R 3/4" K | 16 | 30 | 15,0 | 32 | 27 |
| **VRK NW 16 HL 3/8 VA** | D | PN 315 | 18 | R 3/8" K | 13 | 31 | 14,5 | 27 | 32 |
| **VRK NW 16 HL VA** | D | PN 315 | 18 | R 1/2" K | 16 | 44 | 27,5 | 27 | 32 |
| **VRK NW 16 HL 3/4 VA** | D | PN 160 | 18 | R 3/4" K | 18 | 32 | 29,5 | 32 | 32 |
| **VRK NW 20 HL 3/8 VA** | D | PN 160 | 22 | R 3/8" K | 12 | 46 | 25,5 | 32 | 36 |
| **VRK NW 20 HL 1/2 VA** | D | PN 160 | 22 | R 1/2" K | 16 | 46 | 27,5 | 27 | 36 |
| **VRK NW 20 HL VA** | D | PN 160 | 22 | R 3/4" K | 18 | 48 | 31,5 | 32 | 36 |
| **VRK NW 20 HL 1 VA** | D | PN 160 | 22 | R 1" K | 18 | 50 | 31,5 | 32 | 36 |
| **VRK NW 25 HL 1/2 VA** | D | PN 160 | 28 | R 1/2" K | 14 | 46 | 25,5 | 41 | 41 |
| **VRK NW 25 HL 3/4 VA** | D | PN 160 | 28 | R 3/4" K | 16 | 49 | 30,5 | 41 | 41 |
| **VRK NW 25 HL VA** | D | PN 160 | 28 | R 1" K | 20 | 34 | 34,5 | 41 | 41 |
| **VRK NW 25 HL 1 1/4 VA** | D | PN 160 | 28 | R 1,1/4" K | 20 | 49 | 30,5 | 46 | 41 |
| **VRK NW 32 HL VA** | D | PN 160 | 35 | R 1,1/4" K | 21 | 39 | 36,5 | 46 | 50 |
| **VRK NW 32 HL 1 VA** | D | PN 160 | 35 | R 1" K | 20 | 34 | 34,5 | 41 | 41 |
| **VRK NW 40 HL 1 1/4 VA** | D | PN 160 | 42 | R 1,1/4" K | 20 | 55 | 31,0 | 55 | 60 |
| **VRK NW 40 HL VA** | D | PN 160 | 42 | R 1,1/2" K | 22 | 42 | 38,0 | 55 | 60 |
| | | | | | | | | | |
| **VRK NW 03 HS VA** | S | PN 400 | 6 | R 1/4" K | 13 | 41 | 26,0 | 17 | 17 |

*Napriek čo najstarostlivejšej kontrole nemôžeme vylúčiť chyby a nepreberáme žiadnu záruku za zahrnuté údaje.*

# VRK VA
Nákrutka pre naskrutkovanie

## Výrobok

| Označenie | Konštrukčný rad | Prevádzkový tlak | Rúrka, vonkajší Ø (mm) | G | i (mm) | L1 (mm) | L2 (mm) | S1 | S3 |
|---|---|---|---|---|---|---|---|---|---|
| **VRK NW 04 HS 3/8 VA** | S | PN 400 | 8 | R 3/8" K | 12 | 40 | 25,0 | 19 | 19 |
| **VRK NW 04 HS VA** | S | PN 400 | 8 | R 1/4" K | 13 | 41 | 26,0 | 17 | 19 |
| **VRK NW 06 HS VA** | S | PN 400 | 10 | R 3/8" K | 13 | 42 | 25,5 | 19 | 22 |
| **VRK NW 06 HS 1/4 VA** | S | PN 400 | 10 | R 1/4" K | 13 | 41 | 26,0 | 17 | 22 |
| **VRK NW 08 HS VA** | S | PN 400 | 12 | R 3/8" K | 13 | 44 | 27,5 | 22 | 24 |
| **VRK NW 08 HS 1/2 VA** | S | PN 400 | 12 | R 1/2" K | 16 | 49 | 30,5 | 22 | 24 |
| **VRK NW 10 HS VA** | S | PN 400 | 14 | R 1/2" K | 16 | 50 | 32,0 | 24 | 27 |
| **VRK NW 13 HS VA** | S | PN 400 | 16 | R 1/2" K | 14 | 51 | 32,5 | 27 | 30 |
| **VRK NW 16 HS VA** | S | PN 400 | 20 | R 3/4" K | 18 | 60 | 35,5 | 32 | 36 |
| **VRK NW 20 HS VA** | S | PN 400 | 25 | R 1" K | 20 | 67 | 38,0 | 41 | 46 |
| **VRK NW 25 HS VA** | S | PN 250 | 30 | R 1,1/4" K | 21 | 71 | 40,5 | 46 | 50 |

Konštrukčný rad: LL = Veľmi ľahká L = Ľahká S = Ťažká – PN = Menovitý tlak PB = Max. prevádzkový tlak – Ø = Vonkajší priemer rúrky

## Varianty produktu

| | |
|---|---|
| **VRK** | Nákrutka pre naskrutkovanie, Oceľ |
| **VRK MG** | Nákrutka pre naskrutkovanie, Mosadz |
| **XVRK VA** | Nákrutka pre naskrutkovanie, Ušľachtilá oceľ |