XVN VA

Nákrutka pre naskrutkovanie

HANSA FLEX

Vlastnosti

Prípojka 1	Vonkajší závit NPT
Tvar tesnenia 1	tesniaci závit
Prípojka 2	metrický vonkajší závit valcový
Tvar tesnenia 2	Vnútorný kužeľ 24°
Konštrukcia	Nákrutka pre naskrutkovanie
Vyhotovenie	priame
Norma	DIN 2353 ISO 8434-1
Rozsah dodávky	Hrdlo (bez presuvnej matice a zárezného krúžku)
Materiál	Ušľachtilá oceľ



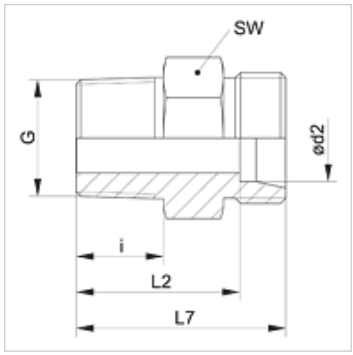

Poznámka

Pokyny pre montáž, zabudovanie, tlakové zaťaženie a povolené prevádzkové teploty nájdete v technických informáciách pre fitingové nákrutky

Výrobok

Označenie	Konštrukčný rad	Prevádzkový tlak	Ø d2 (mm)	G	i (mm)	L2 (mm)	L7 (mm)	SW (mm)
XVN 04 LL VA	LL	PN 100	4	1/8" -27 NPT	10,0	18,0	22,0	11
XVN 06 LL VA	LL	PN 100	6	1/8" -27 NPT	10,0	16,5	22,0	11
XVN 08 LL VA	LL	PN 100	8	1/8" -27 NPT	10,0	18,5	24,0	12
XVN NW 04 HL VA	D	PN 315	6	1/8" -27 NPT	10,0	17,0	24,0	12
XVN NW 04 HL 1/4 VA	D	PN 315	6	1/4" -18 NPT	15,0	23,0	30,0	17
XVN NW 04 HL 3/8 VA	D	PN 315	6	3/8" -18 NPT	15,3	24,0	31,0	19
XVN NW 04 HL 1/2 VA	D	PN 315	6	1/2" -14 NPT	20,0	29,0	36,0	24
XVN NW 06 HL 1/8 VA	D	PN 315	8	1/8" -27 NPT	10,0	18,0	25,0	17
XVN NW 06 HL VA	D	PN 315	8	1/4" -18 NPT	15,0	23,0	30,0	17
XVN NW 06 HL 3/8 VA	D	PN 315	8	3/8" -18 NPT	15,3	24,0	31,0	19
XVN NW 06 HL 1/2 VA	D	PN 315	8	1/2" -14 NPT	20,0	29,0	36,0	24
XVN NW 08 HL 1/8 VA	D	PN 315	10	1/8" -27 NPT	10,0	19,0	26,0	17
XVN NW 08 HL VA	D	PN 315	10	1/4" -18 NPT	15,0	24,0	31,0	17
XVN NW 08 HL 3/8 VA	D	PN 315	10	3/8" -18 NPT	15,3	25,0	32,0	19
XVN NW 08 HL 1/2 VA	D	PN 315	10	1/2" -14 NPT	20,0	30,0	37,0	24
XVN NW 08 HL 3/4 VA	D	PN 315	10	3/4" -14 NPT	20,2	31,0	38,0	27
XVN NW 10 HL 1/8 VA	D	PN 315	12	1/8" -27 NPT	10,0	19,5	26,5	19
XVN NW 10 HL 1/4 VA	D	PN 315	12	1/4" -18 NPT	15,0	25,0	32,0	19
XVN NW 10 HL VA	D	PN 315	12	3/8" -18 NPT	15,3	25,0	32,0	19
XVN NW 10 HL 1/2 VA	D	PN 315	12	1/2" -14 NPT	20,0	30,0	37,0	24
XVN NW 10 HL 3/4 VA	D	PN 315	12	3/4" -14 NPT	20,2	31,0	38,0	27
XVN NW 13 HL 1/4 VA	D	PN 315	15	1/4" -18 NPT	15,0	26,0	33,0	24
XVN NW 13 HL 3/8 VA	D	PN 315	15	3/8" -18 NPT	15,3	26,5	33,5	24
XVN NW 13 HL VA	D	PN 315	15	1/2" -14 NPT	20,0	31,0	38,0	24
XVN NW 13 HL 3/4 VA	D	PN 315	15	3/4" -14 NPT	20,2	32,0	39,0	27
XVN NW 13 HL 1 VA	D	PN 315	15	1" -11,5 NPT	25,0	37,5	44,5	36
XVN NW 16 HL 3/8 VA	D	PN 315	18	3/8" -18 NPT	15,3	27,0	34,5	27
XVN NW 16 HL VA	D	PN 315	18	1/2" -14 NPT	20,0	31,5	39,0	27
XVN NW 16 HL 3/4 VA	D	PN 315	18	3/4" -14 NPT	20,2	31,5	39,0	27
XVN NW 16 HL 1 VA	D	PN 315	18	1" -11,5 NPT	25,0	37,0	44,5	36
XVN NW 20 HL 3/8 VA	D	PN 160	22	3/8" -18 NPT	15,3	29,0	36,5	32
XVN NW 20 HL 1/2 VA	D	PN 160	22	1/2" -14 NPT	20,0	33,5	41,0	32
XVN NW 20 HL VA	D	PN 160	22	3/4" -14 NPT	20,2	33,5	41,0	32
XVN NW 20 HL 1 VA	D	PN 160	22	1" -11,5 NPT	25,0	39,0	46,5	36
XVN NW 20 HL 1 1/4 VA	D	PN 160	22	1,1/4" -11,5 NPT	25,6	41,5	49,0	46
XVN NW 25 HL 1/2 VA	D	PN 160	28	1/2" -14 NPT	20,0	34,5	24,0	41
XVN NW 25 HL 3/4 VA	D	PN 160	28	3/4" -14 NPT	20,2	34,5	42,0	41
XVN NW 25 HL VA	D	PN 160	28	1" -11,5 NPT	25,0	39,5	47,0	41
XVN NW 25 HL 11/4 VA	D	PN 160	28	1,1/4" -11,5 NPT	25,6	41,5	49,0	46
XVN NW 32 HL 3/4 VA	D	PN 160	35	3/4" -14 NPT	20,2	35,0	45,5	46
XVN NW 32 HL 1 VA	D	PN 160	35	1" -11,5 NPT	25,0	40,0	50,5	46
XVN NW 32 HL VA	D	PN 160	35	1,1/4" -11,5 NPT	25,6	40,5	51,0	46
XVN NW 32 HL 1 1/2 VA	D	PN 160	35	1,1/2" -11,5 NPT	26,0	42,5	53,0	55

Napriek čo najstarostlivejšej kontrole nemôžeme vylúčiť chyby a nepreberáme žiadnu záruku za zahrnuté údaje.

XVN VA
Nákrutka pre naskrutkovanie

HANSA-FLEX

Výrobok

Označenie	Konštrukčný rad	Prevádzkový tlak	Ø d2 (mm)	G	i (mm)	L2 (mm)	L7 (mm)	SW (mm)
XVN NW 40 HL 1 VA	D	PN 160	42	1" -11,5 NPT	25,0	41,0	52,0	55
XVN NW 40 HL 11/4 VA	D	PN 160	42	1,1/4" -11,5 NPT	25,6	41,5	52,5	55
XVN NW 40 HL VA	D	PN 160	42	1,1/2" -11,5 NPT	26,0	42,0	53,0	55
XVN NW 03 HS 1/8 VA	S	PN 630	6	1/8" -27 NPT	10,0	23,0	30,0	17
XVN NW 03 HS VA	S	PN 630	6	1/4" -18 NPT	15,0	28,0	35,0	17
XVN NW 03 HS 1/2 VA	S	PN 630	6	1/2" -14 NPT	20,0	35,0	42,0	24
XVN NW 03 HS 3/8 VA	S	PN 630	6	3/8" -18 NPT	15,3	28,0	35,0	19
XVN NW 04 HS 1/8 VA	S	PN 630	8	1/8" -27 NPT	10,0	23,0	30,0	17
XVN NW 04 HS 3/8 VA	S	PN 630	8	3/8" -18 NPT	15,3	28,0	35,0	19
XVN NW 04 HS VA	S	PN 630	8	1/4" -18 NPT	15,0	28,0	35,0	17
XVN NW 04 HS 1/2 VA	S	PN 630	8	1/2" -14 NPT	20,0	35,0	42,0	24
XVN NW 06 HS 1/8 VA	S	PN 630	10	1/8" -27 NPT	10,0	22,5	30,0	19
XVN NW 06 HS 1/4 VA	S	PN 630	10	1/4" -18 NPT	15,0	27,5	35,0	19
XVN NW 06 HS VA	S	PN 630	10	3/8" -18 NPT	15,3	27,5	35,0	19
XVN NW 06 HS 1/2 VA	S	PN 400	10	1/2" -14 NPT	20,0	34,5	42,0	24
XVN NW 06 HS 3/4 VA	S	PN 630	10	3/4" -14 NPT	20,2	36,5	44,0	32
XVN NW 08 HS 1/4 VA	S	PN 630	12	1/4" -18 NPT	15,0	29,0	36,5	22
XVN NW 08 HS 3/4 VA	S	PN 630	12	3/4" -14 NPT	20,0	36,5	44,0	32
XVN NW 08 HS VA	S	PN 630	12	3/8" -18 NPT	15,3	29,5	37,0	22
XVN NW 08 HS 1/2 VA	S	PN 630	12	1/2" -14 NPT	20,0	34,5	42,0	24
XVN NW 10 HS 3/8 VA	S	PN 630	14	3/8" -18 NPT	15,3	31,5	39,5	24
XVN NW 10 HS VA	S	PN 630	14	1/2" -14 NPT	20,0	36,0	44,0	24
XVN NW 10 HS 3/4 VA	S	PN 630	14	3/4" -14 NPT	20,2	38,0	46,0	32
XVN NW 10 HS 1 VA	S	PN 630	14	1" -11,5 NPT	25,0	45,0	53,0	41
XVN NW 13 HS VA	S	PN 400	16	1/2" -14 NPT	20,0	35,5	44,0	27
XVN NW 13 HS 3/8 VA	S	PN 400	16	3/8" -18 NPT	15,3	31,0	39,5	27
XVN NW 13 HS 3/4 VA	S	PN 400	16	3/4" -14 NPT	20,2	37,5	46,0	32
XVN NW 13 HS 1 VA	S	PN 400	16	1" -11,5 NPT	25,0	44,5	53,0	41
XVN NW 16 HS 3/8 VA	S	PN 400	20	3/8" -18 NPT	15,3	33,0	43,5	32
XVN NW 16 HS 1/2 VA	S	PN 400	20	1/2" -14 NPT	20,0	37,5	48,0	32
XVN NW 16 HS VA	S	PN 400	20	3/4" -14 NPT	20,2	37,5	48,0	32
XVN NW 16 HS 1 VA	S	PN 400	20	1" -11,5 NPT	25,0	44,5	55,0	41
XVN NW 16 HS 1 1/4 VA	S	PN 400	20	1,1/4" -11,5 NPT	25,6	45,5	56,0	46
XVN NW 20 HS 3/4 VA	S	PN 400	25	3/4" -14 NPT	20,2	40,0	52,0	41
XVN NW 20 HS VA	S	PN 400	25	1" -11,5 NPT	25,0	45,0	57,0	41
XVN NW 20 HS 1/2 VA	S	PN 400	25	1/2" -14 NPT	20,0	40,0	52,0	41
XVN NW 20 HS 1 1/4 VA	S	PN 400	25	1,1/4" -11,5 NPT	25,6	46,0	58,0	46
XVN NW 20 HS 1 1/2 VA	S	PN 400	25	1,1/2" -11,5 NPT	26,0	49,0	61,0	55
XVN NW 25 HS VA	S	PN 400	30	1,1/4" -11,5 NPT	25,6	46,5	60,0	46
XVN NW 25 HS 3/4 VA	S	PN 400	30	3/4" -14 NPT	20,2	41,0	54,5	46
XVN NW 25 HS 1 VA	S	PN 400	30	1" -11,5 NPT	25,0	46,0	59,5	46
XVN NW 25 HS 1 1/2 VA	S	PN 400	30	1,1/2" -11,5 NPT	26,0	49,5	63,0	55
XVN NW 32 HS 1 VA	S	PN 315	38	1" -11,5 NPT	25,0	48,0	64,0	55
XVN NW 32 HS VA	S	PN 315	38	1,1/2" -11,5 NPT	26,0	49,0	65,0	55
XVN NW 32 HS 1 1/4 VA	S	PN 315	38	1,1/4" -11,5 NPT	25,6	48,5	64,5	55

Konštrukčný rad: LL = Veľmi ľahká L = Ľahká S = Ťažká – PN = Menovitý tlak PB = Max. prevádzkový tlak – Ø d2 = Vonkajší priemer rúry

Varianty produktu

XVN	Nákrutka pre naskrutkovanie, Oceľ
VN VA	Nákrutka pre naskrutkovanie, Ušľachtilá oceľ