# SRS 30-100 PA

Rúrková objímka, ťažký konštrukčný rad

HANSA FLEX

## Vlastnosti

| | |
|---|---|
| **Konštrukcia** | Objímka pre jednotlivú rúrku |
| **Konštrukcia, doplnok** | Vnútorná strana objímky s rebrom |
| **Konštrukčný rad** | ťažká |
| **Norma** | DIN 3015-2 |
| **Teplota min.** | -40 °C |
| **Teplota max.** | 120 °C |
| **Materiál** | Polyamid 6 |



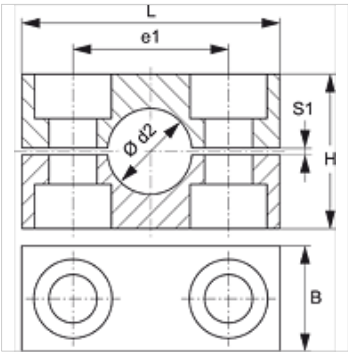


## Popis

Rebrá na vnútornej strane objímok pôsobia tlmivo voči nárazom a vibráciám a zachytávajú sily pôsobiace v smere osi rúrky.
Medzera medzi oboma polovicami vyvoláva predpätie rúrky.

## Pokyny pre objednanie

1 kus = 2 polovice objímky

## Výrobok

| Označenie | Veľkosť objímky | Vonkajší Ø rúrky d2 (mm) | Vonkajší Ø rúrky d2 | B (mm) | e1 (mm) | V (mm) | D (mm) | S1 (mm) |
|---|---|---|---|---|---|---|---|---|
| **SRS 3006 PA** | 1 | 6,0 | - | 30 | 33 | 32 | 56 | 2 |
| **SRS 3008 PA** | 1 | 8,0 | 5/16" | 30 | 33 | 32 | 56 | 2 |
| **SRS 3010 PA** | 1 | 10,0 | - | 30 | 33 | 32 | 56 | 2 |
| **SRS 3012 PA** | 1 | 12,0 | - | 30 | 33 | 32 | 56 | 2 |
| **SRS 3012.7 PA** | 1 | 12,7 | 1/2" | 30 | 33 | 32 | 56 | 2 |
| **SRS 3013.5 PA** | 1 | 13,5 | - | 30 | 33 | 32 | 56 | 2 |
| **SRS 3014 PA** | 1 | 14,0 | - | 30 | 33 | 32 | 56 | 2 |
| **SRS 3015 PA** | 1 | 15,0 | - | 30 | 33 | 32 | 56 | 2 |
| **SRS 3016 PA** | 1 | 16,0 | 5/8" | 30 | 33 | 32 | 56 | 2 |
| **SRS 3017.2 PA** | 1 | 17,2 | - | 30 | 33 | 32 | 56 | 2 |
| **SRS 3018 PA** | 1 | 18,0 | - | 30 | 33 | 32 | 56 | 2 |
| **SRS 4019 PA** | 2 | 19,0 | 3/4" | 30 | 45 | 48 | 71 | 2 |
| **SRS 4020 PA** | 2 | 20,0 | - | 30 | 45 | 48 | 71 | 2 |
| **SRS 4021.3 PA** | 2 | 21,3 | - | 30 | 45 | 48 | 71 | 2 |
| **SRS 4022 PA** | 2 | 22,0 | - | 30 | 45 | 48 | 71 | 2 |
| **SRS 4023 PA** | 2 | 23,0 | - | 30 | 45 | 48 | 71 | 2 |
| **SRS 4025 PA** | 2 | 25,0 | 1" | 30 | 45 | 48 | 71 | 2 |
| **SRS 4026.9 PA** | 2 | 26,9 | - | 30 | 45 | 48 | 71 | 2 |
| **SRS 4028 PA** | 2 | 28,0 | - | 30 | 45 | 48 | 71 | 2 |
| **SRS 4030 PA** | 2 | 30,0 | - | 30 | 45 | 48 | 71 | 2 |
| **SRS 5030 PA** | 3 | 30,0 | - | 30 | 60 | 60 | 86 | 2 |
| **SRS 5032 PA** | 3 | 32,0 | 1.1/4" | 30 | 60 | 60 | 86 | 2 |
| **SRS 5033.7 PA** | 3 | 33,7 | - | 30 | 60 | 60 | 86 | 2 |
| **SRS 5035 PA** | 3 | 35,0 | - | 30 | 60 | 60 | 86 | 2 |
| **SRS 5038 PA** | 3 | 38,0 | 1.1/2" | 30 | 60 | 60 | 86 | 2 |
| **SRS 5040 PA** | 3 | 40,0 | - | 30 | 60 | 60 | 86 | 2 |
| **SRS 5042 PA** | 3 | 42,0 | - | 30 | 60 | 60 | 86 | 2 |
| **SRS 6038 PA** | 4 | 38,0 | 1.1/2" | 45 | 90 | 90 | 117 | 3 |
| **SRS 6040 PA** | 4 | 40,0 | - | 45 | 90 | 90 | 117 | 3 |
| **SRS 6042 PA** | 4 | 42,0 | - | 45 | 90 | 90 | 117 | 3 |
| **SRS 6045 PA** | 4 | 45,0 | - | 45 | 90 | 90 | 117 | 3 |
| **SRS 6048.3 PA** | 4 | 48,3 | - | 45 | 90 | 90 | 117 | 3 |
| **SRS 6050 PA** | 4 | 50,0 | - | 45 | 90 | 90 | 117 | 3 |
| **SRS 6051 PA** | 4 | 51,0 | 2" | 45 | 90 | 90 | 117 | 3 |
| **SRS 6052 PA** | 4 | 52,0 | - | 45 | 90 | 90 | 117 | 3 |
| **SRS 6055 PA** | 4 | 55,0 | - | 45 | 90 | 90 | 117 | 3 |
| **SRS 6057 PA** | 4 | 57,0 | 2.1/4" | 45 | 90 | 90 | 117 | 3 |
| **SRS 6060.3 PA** | 4 | 60,3 | - | 45 | 90 | 90 | 117 | 3 |
| **SRS 6063 PA** | 4 | 63,0 | 2.1/2" | 45 | 90 | 90 | 117 | 3 |
| **SRS 6065 PA** | 4 | 65,0 | - | 45 | 90 | 90 | 117 | 3 |
| **SRS 6070 PA** | 4 | 70,0 | - | 45 | 90 | 90 | 117 | 3 |

*Napriek čo najstarostlivejšej kontrole nemôžeme vylúčiť chyby a nepreberáme žiadnu záruku za zahrnuté údaje.*

# SRS 30-100 PA

Rúrková objímka, ťažký konštrukčný rad

## Výrobok

| Označenie | Veľkosť objímky | Vonkajší Ø rúrky d2 (mm) | Vonkajší Ø rúrky d2 | B (mm) | e1 (mm) | V (mm) | D (mm) | S1 (mm) |
|---|---|---|---|---|---|---|---|---|
| **SRS 7070 PA** | 5 | 70,0 | - | 60 | 122 | 120 | 154 | 5 |
| **SRS 7073 PA** | 5 | 73,0 | - | 60 | 122 | 120 | 154 | 5 |
| **SRS 7075 PA** | 5 | 75,0 | - | 60 | 122 | 120 | 154 | 5 |
| **SRS 7076.1 PA** | 5 | 76,1 | 3" | 60 | 122 | 120 | 154 | 5 |
| **SRS 7080 PA** | 5 | 80,0 | - | 60 | 122 | 120 | 154 | 5 |
| **SRS 7082.5 PA** | 5 | 82,5 | 3.1/4" | 60 | 122 | 120 | 154 | 5 |
| **SRS 7088.9 PA** | 5 | 88,9 | 3.1/2" | 60 | 122 | 120 | 154 | 5 |
| **SRS 7090 PA** | 5 | 90,0 | - | 60 | 122 | 120 | 154 | 5 |
| **SRS 8090 PA** | 6 | 90,0 | - | 80 | 168 | 170 | 205 | 6 |
| **SRS 8097 PA** | 6 | 97,0 | - | 80 | 168 | 170 | 205 | 6 |
| **SRS 8100 PA** | 6 | 100,0 | - | 80 | 168 | 170 | 205 | 6 |
| **SRS 8101.6 PA** | 6 | 101,6 | 4" | 80 | 168 | 170 | 205 | 6 |
| **SRS 8108 PA** | 6 | 108,0 | 4.1/4" | 80 | 168 | 170 | 205 | 6 |
| **SRS 8114.3 PA** | 6 | 114,3 | 4.1/2" | 80 | 168 | 170 | 205 | 6 |
| **SRS 8127 PA** | 6 | 127,0 | 5" | 80 | 168 | 170 | 205 | 6 |
| **SRS 9127 PA** | 7 | 127,0 | 5" | 90 | 205 | 200 | 250 | 6 |
| **SRS 9133 PA** | 7 | 133,0 | 5.1/4" | 90 | 205 | 200 | 250 | 6 |
| **SRS 9140 PA** | 7 | 140,0 | 5.1/2" | 90 | 205 | 200 | 250 | 6 |
| **SRS 9150 PA** | 7 | 150,0 | - | 90 | 205 | 200 | 250 | 6 |
| **SRS 9152.4 PA** | 7 | 152,4 | 6" | 90 | 205 | 200 | 250 | 6 |
| **SRS 9159 PA** | 7 | 159,0 | 6.1/4" | 90 | 205 | 200 | 250 | 6 |
| **SRS 9165.1 PA** | 7 | 165,1 | 6.1/2" | 90 | 205 | 200 | 250 | 6 |
| **SRS 9168.3 PA** | 7 | 168,3 | 6.5/8" | 90 | 205 | 200 | 250 | 6 |
| **SRS 10168.3 PA** | 8 | 168,3 | 6.5/8" | 120 | 265 | 270 | 320 | 6 |
| **SRS 10177.8 PA** | 8 | 177,8 | 7" | 120 | 265 | 270 | 320 | 6 |
| **SRS 10193.7 PA** | 8 | 193,7 | 7.5/8" | 120 | 265 | 270 | 320 | 6 |
| **SRS 10203 PA** | 8 | 203,0 | - | 120 | 265 | 270 | 320 | 6 |
| **SRS 10219.1 PA** | 8 | 219,1 | 8.5/8" | 120 | 265 | 270 | 320 | 6 |
| **SRS 10220 PA** | 8 | 220,0 | - | 120 | 265 | 270 | 320 | 6 |

## Varianty produktu

| | |
|---|---|
| **SRS 30-100 AL** | Rúrková objímka, ťažký konštrukčný rad, Vnútorná strana objímky s rebrom |
| **SRS 30-100 PP** | Rúrková objímka, ťažký konštrukčný rad, Vnútorná strana objímky s rebrom |
| **SRS 30-100 PP G** | Rúrková objímka, ťažký konštrukčný rad, Vnútorná strana objímky hladká |
| **SRS 30-100 VG** | Rúrková objímka, ťažký konštrukčný rad, Vnútorná strana objímky s rebrom |