DSR U

Dvojitá stierka, DSR-U

HANSA-FLEX

Vlastnosti

Konštrukcia	Stierač
Rýchlosť kĺzania max.	0,5 m/s
Teplota min.	-30 °C
Teplota max.	110 °C
Médiá	Minerálne oleje Vodné emulzie
Montáž	Stierku tvarujte do formy obličky a zatlačte do upínacej drážky
Použitie	Hydraulika
Materiál	NBR



Toleranz / Tolerance

d	D	L	C	F	G
h11	H11	+0,20 0	H10	H11	+0,20 0

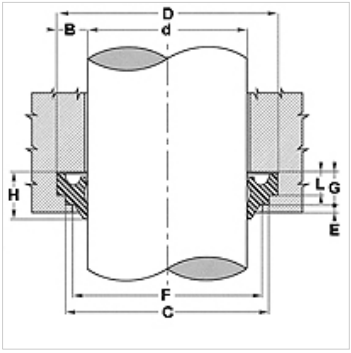

Popis

jednoduchá montáž

Výrobok

Označenie	D: (mm)	d (mm)	D (mm)	C (mm)	F (mm)	G (mm)	E (mm)	V (mm)
DSR 10-U	18	10	4,0	16	13,5	6,0	2	8
DSR 12-U	20	12	4,0	18	15,5	6,0	2	8
DSR 14-U	22	14	4,0	20	17,5	6,0	2	8
DSR 15-U	23	15	4,0	21	18,5	6,0	2	8
DSR 16-U	24	16	4,0	22	19,5	6,0	2	8
DSR 18-U	26	18	4,0	24	21,5	6,0	2	8
DSR 20-U	28	20	4,0	26	23,5	6,0	2	8
DSR 22-U	30	22	4,0	28	25,5	6,0	2	8
DSR 24-U	32	24	4,0	30	27,5	6,0	2	8
DSR 25-U	33	25	4,0	31	28,5	6,0	2	8
DSR 28-U	36	28	4,0	34	31,5	6,0	2	8
DSR 30-U	38	30	4,0	36	33,5	6,0	2	8
DSR 32-U	40	32	4,0	38	35,5	6,0	2	8
DSR 35-U	43	35	4,0	41	38,5	6,0	2	8
DSR 36-U	44	36	4,0	42	39,5	6,0	2	8
DSR 37-U	45	37	4,0	43	40,5	6,0	2	8
DSR 38-U	46	38	4,0	44	41,5	6,0	2	8
DSR 40-U	48	40	4,0	46	43,5	6,0	2	8
DSR 42-U	50	42	4,0	48	45,5	6,0	2	8
DSR 45-U	53	45	4,0	51	48,5	6,0	2	8
DSR 46-U	54	46	4,0	52	49,5	6,0	2	8
DSR 48-U	56	48	4,0	54	51,5	6,0	2	8
DSR 50-U	58	50	4,0	56	53,5	6,0	2	8
DSR 55-U	63	55	4,0	61	58,5	6,0	2	8
DSR 56-U	64	56	4,0	62	59,5	6,0	2	8
DSR 60-U	68	60	4,0	66	63,5	6,0	2	8
DSR 63-U	71	63	4,0	69	66,5	6,0	2	8
DSR 65-U	73	65	4,0	71	68,5	6,0	2	8
DSR 70-U	78	70	4,0	76	73,5	6,0	2	8
DSR 75-U	83	75	4,0	81	78,5	6,0	2	8
DSR 80-U	88	80	4,0	86	83,5	6,0	2	8
DSR 85-U	93	85	4,0	91	88,5	6,0	2	8
DSR 90-U	98	90	4,0	96	93,5	6,0	2	8
DSR 100-U	108	100	4,0	106	103,5	6,0	2	8
DSR 110-U	122	110	5,5	119	115,0	8,2	3	11
DSR 125-U	137	125	5,5	134	130,0	8,2	3	11
DSR 130-U	142	130	5,5	139	135,0	8,2	3	11
DSR 140-U	152	140	5,5	149	145,0	8,2	3	11
DSR 145-U	157	145	5,5	154	150,0	8,2	3	11
DSR 150-U	162	150	5,5	159	155,0	8,2	3	11
DSR 160-U	172	160	5,5	169	165,0	8,2	3	11
DSR 200-U	212	200	5,5	209	205,0	8,2	3	11
DSR 220-U	235	220	6,5	231	227,0	9,5	3	13
DSR 360-U	375	360	6,5	371	367,0	9,5	3	13

Napriek čo najstarostlivejšej kontrole nemôžeme vylúčiť chyby a nepreberáme žiadnu záruku za zahrnuté údaje.