# K-HAND-SCHIEBEVENTIL
Manual slide valves

HANSA-FLEX

## Vlastnosti

| | |
|---|---|
| **Prevádzkový tlak** | max. 10 bar |
| **Prevádzková teplota** | max. +70 °C |



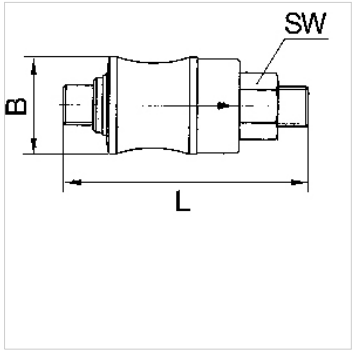


## Poznámka

Ďalšie údaje na vyžiadanie.

## Popis

For use on devices that have to be vented whenever they are turned off, either because of safety regulations or for technical reasons. The pneumatic devices are disconnected from the system and simultaneously vented each time they are shut off.

## Výrobok

| Označenie | Závit | B (mm) | D (mm) | SW (mm) |
|---|---|---|---|---|
| **K- 07 30 15 92** | G 1/8 | 21,0 | 67,0 | 14 |
| **K- 07 30 15 93** | G 1/4 | 24,0 | 77,0 | 17 |
| **K- 07 30 15 94** | G 3/8 | 31,0 | 87,0 | 22 |
| **K- 07 30 15 95** | G 1/2 | 35,0 | 104,0 | 26 |

*Napriek čo najstarostlivejšej kontrole nemôžeme vylúčiť chyby a nepreberáme žiadnu záruku za zahrnuté údaje.*