K-BKR EINTEILIG VA

Ball valves

Vlastnosti

Prevádzkový tlak	max. 55 bar (depending on connection size and temperature)
Prevádzková teplota	Max. 150 °C
tesnenie	PTFE
ručná páka	Stainless steel 1.4301

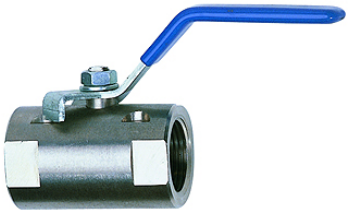

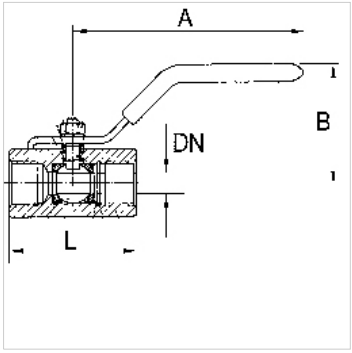

Poznámka

G thread acc. to DIN EN ISO 228-1, with ISO flange plate (acc. to ISO 5211)
Ďalšie údaje na vyžiadanie.

Popis

Full bore with G 1/4 to G 3/8, reduced bore with G 1/2 to G 2

Pokyny pre objednanie

For use on devices that have to be vented whenever they are turned off, either because of safety regulations or for technical reasons. The pneumatic devices are disconnected from the system and simultaneously vented each time they are shut off.

Výrobok

Označenie	DN	Závit	A: (mm)	B (mm)	D (mm)	Materiál
K- 07 30 14 94	5	G 1/4	60,0	30,0	39,8	Stainless steel 1.4401/1.4408
K- 07 30 14 95	7	G 3/8	80,0	33,0	44,8	Stainless steel 1.4401/1.4408
K- 07 30 14 96	9	G 1/2	110,0	57,0	56,5	Stainless steel 1.4401/1.4408
K- 07 30 14 97	13	G 3/4	110,0	61,0	60,0	Stainless steel 1.4401/1.4408
K- 07 30 14 98	15	G 1	124,0	70,0	70,0	Stainless steel 1.4401/1.4408
K- 07 30 14 99	20	G 1 1/4	152,0	75,0	77,6	Stainless steel 1.4401/1.4408
K- 07 30 15 00	25	G 1 1/2	150,0	80,0	87,0	Stainless steel 1.4401/1.4408
K- 07 30 15 01	32	G 2	155,0	85,0	102,0	Stainless steel 1.4401/1.4408

Napriek čo najstarostlivejšej kontrole nemôžeme vylúčiť chyby a nepreberáme žiadnu záruku za zahrnuté údaje.