K-ABBLV 2

Blow-off safety valves G 1/4

Vlastnosti

Prevádzkový tlak	0.5 - 60 bar
Prevádzková teplota	max. 180 °C
Tesnenia	FKM
Kryt	Brass



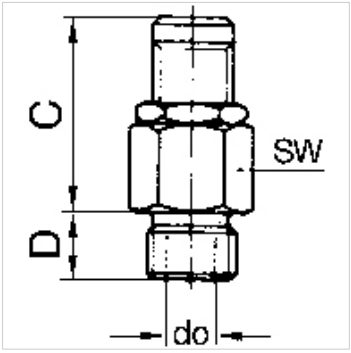

Poznámka

G thread acc. to DIN EN ISO 228-1, with ISO flange plate (acc. to ISO 5211)
Ďalšie údaje na vyžiadanie.

Popis

Manual adjustment of the blow-off pressure (lock nut).

Pokyny pre objednanie

For use on devices that have to be vented whenever they are turned off, either because of safety regulations or for technical reasons. The pneumatic devices are disconnected from the system and simultaneously vented each time they are shut off.

Dodatočné informácie

These blow-off valves can also be supplied with a fixed setting and a TÜV type test number. Please ask for an offer.

Výrobok

Označenie	Závit	Reakčný tlak	Výkon vyfukovania	C (mm)	D: (mm)	do (mm)	SW (mm)
K- 07 30 29 18	G 1/4	0.5 - 1.0 bar	to 50 l/min	27,0	7,0	3,0	16
K- 07 30 21 95	G 1/4	1.0 - 4.0 bar	to 200 l/min	27,0	7,0	3,0	16
K- 07 30 21 96	G 1/4	3.0 - 7.0 bar	to 350 l/min	27,0	7,0	3,0	16
K- 07 30 21 97	G 1/4	6.0 - 12.0 bar	to 650 l/min	27,0	7,0	3,0	16
K- 07 30 21 98	G 1/4	10.0 - 18.0 bar	to 870 l/min	27,0	7,0	3,0	16
K- 07 30 21 99	G 1/4	16.0 - 32.0 bar	to 1600 l/min	27,0	7,0	3,0	16
K- 07 30 22 00	G 1/4	30.0 - 60.0 bar	to 3000 l/min	27,0	7,0	3,0	16

Napriek čo najstarostlivejšej kontrole nemôžeme vylúčiť chyby a nepreberáme žiadnu záruku za zahrnuté údaje.