K-HOCHLEIST DRUCKREGLER

Heavy-duty pressure regulators

Vlastnosti

Vstupný tlak	Max. 25 bar
Teplota média	max. 60 °C
Teplota okolia	Max. 60 °C
Prietok	50000 l/min
Tesniaci materiál	NBR
Kryt	Aluminium, painted silver
Meranie prietočného množstva	At P1 = 8 bar, P2 = 6 bar and pressure drop Δp = 1 bar



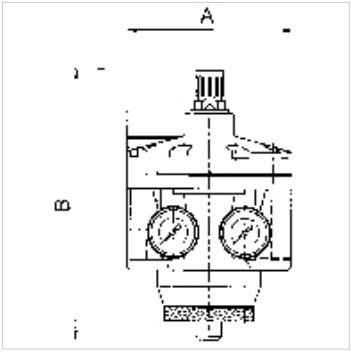

Poznámka

Ďalšie údaje na vyžiadanie.

Popis

Diaphragm pressure regulators, independent of inlet pressure, with internal pilot control and self-relieving designfor very high flow rates. Separate indication of input and working pressure on two pressure gauges. The pressure setting can be locked by pushing the knob down. We recommend always using these controllers in conjunction with our K-07250607 and K-07250609 filters.

Výrobok

Označenie	Závit	Rozsah regulácie	A: (mm)	B	DN
K- 07 25 08 03	G 1 1/2	0.1 - 3 bar	188,0	261,0 mm	50
K- 07 25 08 04	G 1 1/2	0.2 - 6 bar	188,0	261,0 mm	50
K- 07 25 08 05	G 1 1/2	0.5 - 10 bar	188,0	261,0 mm	50
K- 07 25 08 06	G 1 1/2	0.5 - 16 bar	188,0	261,0 mm	50
K- 07 25 08 07	G 2	0.1 - 3 bar	160,0	261,0 mm	50
K- 07 25 08 08	G 2	0.2 - 6 bar	160,0	261,0 mm	50
K- 07 25 08 09	G 2	0.5 - 10 bar	160,0	261,0 mm	50
K- 07 25 08 10	G 2	0.5 - 16 bar	160,0	261,0 mm	50

Náhradné diely

K-VERSCHLEI-SATZ	Set of wearing parts
K-LOESBARE DOPPELNIPPEL MS	Double nipples

Napriek čo najstarostlivejšej kontrole nemôžeme vylúčiť chyby a nepreberáme žiadnu záruku za zahrnuté údaje.