K-WTEH 3-TLG MET MANO T STANDARD-MI

Service units, 3-piece with metal bowl and pressure gauge, metal sight dome

Vlastnosti

Vstupný tlak	Max. 16 bar (polycarbonate bowl), Max. 25 bar (metal bowl)
Teplota média	max. 60 °C
Teplota okolia	Max. 60 °C
Prietok	350 l/min (2-piece), 300 l/min (3-piece)
Veľkosť pórov vo filtračnej vložke	5 µm
Tesniaci materiál	NBR
Kryt	Die-cast zinc, painted silver
Vložka kvapkadla	PA (polycarbonate bowl), Zinc-glass-NBR (metal bowl)
Drain valve	Semi-automatic for variant with polycarbonate bowl, Manual for variant with metal bowl
Meranie prietočného množstva	At P1 = 8 bar, P2 = 6 bar and pressure drop Δp = 1 bar



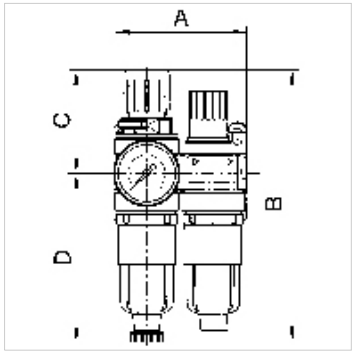

Poznámka

Ďalšie údaje na vyžiadanie.

Popis

Compact, two or three-piece service units consisting of a reversible diaphragm pressure regulator, independent of inlet pressure, with self-relieving design, combined with a centrifugal separator and a proportional lubricator.

Výrobok

Označenie	Závit	Rozsah regulácie	A: (mm)	B	C (mm)	D: (mm)	DN
K- 07 25 14 53	G 1/8	0.5 - 10 bar	130,0	143,0 mm	49,0	94,0	5
K- 07 25 14 55	G 1/4	0.5 - 10 bar	130,0	143,0 mm	49,0	94,0	5

Náhradné diely

K-HALTERBAUSATZ	Holder
K-SCHALTTAFELMUTTER	Nut
K-ERSATZBEHAELTER MULTI MINI	Spare tank »multifix-mini« & »standard-mini«
K-PC-BEHAELTER FILTER MULTIFIX	Polycarbonate tank filter
K-VERSCHLEI-SATZ	Set of wearing parts
K-FILTERELEMENT	Filter element
K-AUTOMAT ABLASSVENTIL	Automatic drain valve
K-TROPFAUFSATZ POLYCARBO	Drip attachment polycarbonate
K-TROPFAUFSATZ METALL	Drip attachment metal
K-LOESBARE DOPPELNIPPEL MS	Double nipples
K-XV AGM MS NI	Double nipples, parallel male thread, nickel-plated brass

Napriek čo najstarostlivejšej kontrole nemôžeme vylúčiť chyby a nepreberáme žiadnu záruku za zahrnuté údaje.