K-FI REGL PC-BEHAEL MANO VARIOBLOC

Filter regulators with polycarbonate bowl and pressure gauge

Vlastnosti

Vstupný tlak	Max. 16 bar (polycarbonate bowl), Max. 20 bar (metal bowl)
Teplota média	max. 50 °C
Teplota okolia	Max. 50 °C (polycarbonate bowl), Max. 80 °C (metal bowl)
Veľkosť pórov vo filtračnej vložke	40 µm
Tesniaci materiál	NBR
kryt pružiny	POM
Kryt	Die-cast zinc
Membrána	NBR
Drain valve	Manual
Meranie prietočného množstva	At P1 = 10 bar, P2 = 6 bar and pressure drop Δp = 1 bar



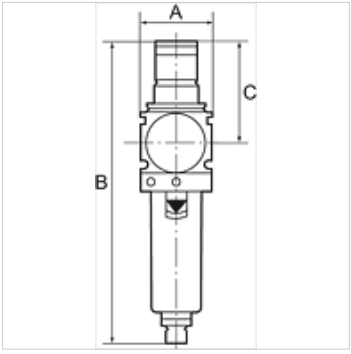

Poznámka

Ďalšie údaje na vyžiadanie.

Popis

Reversible diaphragm pressure regulators, independent of inlet pressure, with self-relieving design, combined with a centrifugal separator. The pressure setting can be locked by pushing the knob down. Approved series in modern industrial design, with the following key benefits: Simple handling, Convenient modular assembly thanks to innovative fasteners, Excellent flow values.

Pokyny pre objednanie

Filter regulators are also available with bowl guard or metal bowl. Filter regulators are also available in lockable version. Please ask for more information.

Dodatočné informácie

Filter regulators are also available with bowl guard or metal bowl. Filter regulators are also available in lockable version. Please ask for more information.

Výrobok

Označenie	Závit	Rozsah regulácie	Prietok (L/min)	A: (mm)	B	C (mm)
K- 07 25 06 85	G 1/4	0.5 - 10 bar	2000	48,0	203,0 mm	68,0
K- 07 25 06 87	G 3/8	0.5 - 10 bar	3000	48,0	203,0 mm	68,0
K- 07 25 06 89	G 1/2	0.5 - 10 bar	5500	70,0	273,0 mm	98,0
K- 07 25 06 91	G 3/4	0.5 - 10 bar	6500	70,0	273,0 mm	98,0
K- 07 25 06 93	G 1	0.5 - 10 bar	6500	124,0	273,0 mm	98,0

Náhradné diely

K-VERSCHLEI-SATZ VARIOBLOC	Set of wearing parts
K-ERSATZBEHAELTER VARIOBLOC POLY	Spare tank Polycarbonat
K-FILTERELEMENT VARIOBLOC	Filter element
K-ABLASSVENTIL AUTO	Fully-automatic drain valve with Adapter G 1/8