K-WKV 2/2 BEIDS SCHNVERSCHR

2/2-way toggle valves, discharge port on both sides, quick-lock screw fitting

Vlastnosti

Prevádzkový tlak	max. 8 bar
Rozsah teplôt	0 °C to +70 °C
Závit ovládacieho panela	M 12 x 0.75 (sheet thickness max. 4 mm)
vnútorné diely	Brass with a bare metal surface
Tesniaci materiál	NBR
dutá skrutka, otočné rameno, sklopné rameno	Nickel-plated brass
tesnenia (nestratiteľné)	Polyamide (glass fibre-reinforced)



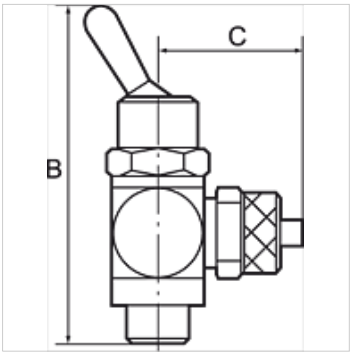

Poznámka

Ďalšie údaje na vyžiadanie.

Popis

Manually operated toggle valves, 2/2 and 3/2-way types. For all applications where compressed air must be switched on or off quickly and easily or a cylinder operated manually. Designed as a banjo-type valve with a hollow bolt and ring piece. Suitable for screwing directly into the equipment or for panel mounting. Compact type of construction, also ideal where space is restricted.

Výrobok

Označenie	Vyhotovenie	C (mm)	pre hadicu	Závit	SW	B (mm)
K- 07 15 07 10	2/2-way	16,0	G 1/8 IG	G 1/8	14 mm	55,0
K- 07 15 07 11	2/2-way	25,0	5 mm / 3 mm	G 1/8	14 mm	55,0
K- 07 15 07 12	2/2-way	25,0	6 mm / 4 mm	G 1/8	14 mm	55,0
K- 07 15 07 13	2/2-way	25,0	8 mm / 6 mm	G 1/8	14 mm	55,0
K- 07 15 07 06	2/2-way	22,0	G 1/4 IG	G 1/4	17 mm	60,0
K- 07 15 07 08	2/2-way	26,5	6 mm / 4 mm	G 1/4	17 mm	60,0
K- 07 15 07 09	2/2-way	27,5	8 mm / 6 mm	G 1/4	17 mm	60,0
K- 07 15 07 07	2/2-way	28,5	10 mm / 8 mm	G 1/4	17 mm	60,0

Napriek čo najstarostlivejšej kontrole nemôžeme vylúčiť chyby a nepreberáme žiadnu záruku za zahrnuté údaje.