K-WKV 3/2 SCHLS STECK

3/2-way toggle valves, discharge port on thread, plug-in connector

Vlastnosti

Prevádzkový tlak	max. 8 bar
Rozsah teplôt	0 °C to +70 °C
Závit ovládacieho panela	M 12 x 0.75 (sheet thickness max. 4 mm)
vnútorné diely	Brass with a bare metal surface
Tesniaci materiál	NBR
dutá skrutka, otočné rameno, sklopné rameno	Nickel-plated brass
tesnenia (nestratiteľné)	Polyamide (glass fibre-reinforced)



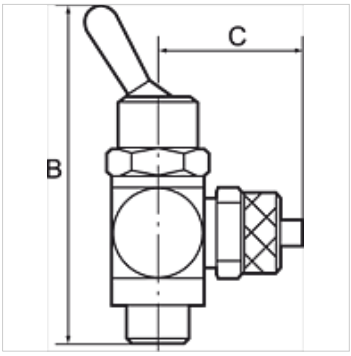

Poznámka

Ďalšie údaje na vyžiadanie.

Popis

Manually operated toggle valves, 2/2 and 3/2-way types. For all applications where compressed air must be switched on or off quickly and easily or a cylinder operated manually. Designed as a banjo-type valve with a hollow bolt and ring piece. Suitable for screwing directly into the equipment or for panel mounting. Compact type of construction, also ideal where space is restricted.

Výrobok

Označenie	Vyhotovenie	C (mm)	pre hadicu	Závit	SW	B (mm)
K- 07 15 07 31	3/2-way	19,5	4 mm	G 1/8	14 mm	55,0
K- 07 15 07 32	3/2-way	22,0	6 mm	G 1/8	14 mm	55,0
K- 07 15 07 33	3/2-way	22,5	8 mm	G 1/8	14 mm	55,0
K- 07 15 07 29	3/2-way	23,5	6 mm	G 1/4	17 mm	60,0
K- 07 15 07 30	3/2-way	24,0	8 mm	G 1/4	17 mm	60,0
K- 07 15 07 28	3/2-way	26,5	10 mm	G 1/4	17 mm	60,0

Napriek čo najstarostlivejšej kontrole nemôžeme vylúčiť chyby a nepreberáme žiadnu záruku za zahrnuté údaje.