K-BKR KL SERIE 374

Ball valves, 374 series

HANSA FLEX

Vlastnosti

Prevádzkový tlak	max. 70 bar (Depending on Temperature)
Prevádzková teplota	Max. 150 °C
tesnenie	PTFE
ručná páka	Stainless steel 1.4301



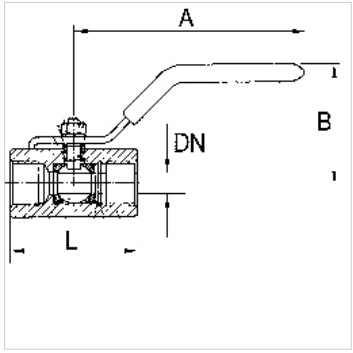

Poznámka

G thread acc. to DIN EN ISO 228-1, with ISO flange plate (acc. to ISO 5211)
Ďalšie údaje na vyžiadanie.

Pokyny pre objednanie

For use on devices that have to be vented whenever they are turned off, either because of safety regulations or for technical reasons. The pneumatic devices are disconnected from the system and simultaneously vented each time they are shut off.

Dodatočné informácie

G thread acc. DIN EN ISO 228-1

Výrobok

Označenie	DN	Závit	A: (mm)	B (mm)	D (mm)	Materiál
K- 07 30 15 32	5	G 1/4	62,0	30,0	47,0	Stainless steel 1.4401/1.4408
K- 07 30 15 33	7	G 3/8	82,0	30,0	51,0	Stainless steel 1.4401/1.4408
K- 07 30 15 34	9	G 1/2	92,0	45,0	64,0	Stainless steel 1.4401/1.4408
K- 07 30 15 35	13	G 3/4	94,0	50,0	68,0	Stainless steel 1.4401/1.4408

Napriek čo najstarostlivejšej kontrole nemôžeme vylúčiť chyby a nepreberáme žiadnu záruku za zahrnuté údaje.