K-INLINE-DRG IG WASSER O SEKUNDAER

Inline pressure regulators, for water applications

Vlastnosti

Prevádzkový tlak	max. 10 bar
Rozsah teplôt	0 °C to +60 °C
Prietok	4000 ml/min with 0.8 bar pressure loss
Kryt	Nickel-plated brass
ostatné diely	CR, stainless steel



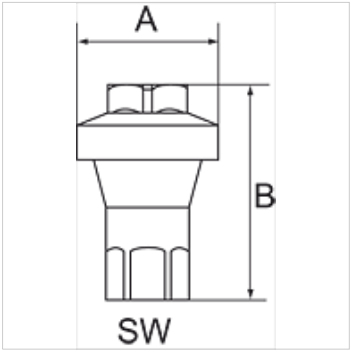

Poznámka

Ďalšie údaje na vyžiadanie.

Popis

This water regulator is designed as a single-acting diaphragm regulator for installation in any water pipe system. It supplies a precise output value regardless of the input pressure. Since the pressure is preset in the factory and cannot be altered, the product is also tamper-proof.
The regulator protects all downstream devices and components in the water pipe by maintaining a required constant pressure and preventing system pressure fluctuations. In combination with a nozzle, it is ideally suited for cooling or cleaning with water spray or mist.

Výrobok

Označenie	Závit	Pracovný tlak prednastavený	A: (mm)	B	SW (mm)
K- 07 25 03 06	G 1/4	1 bar	34,0	51,0 mm	17
K- 07 25 03 07	G 1/4	2 bar	34,0	51,0 mm	17
K- 07 25 03 08	G 1/4	3 bar	34,0	51,0 mm	17
K- 07 25 03 09	G 1/4	4 bar	34,0	51,0 mm	17

Napriek čo najstarostlivejšej kontrole nemôžeme vylúčiť chyby a nepreberáme žiadnu záruku za zahrnuté údaje.