K-DRG DRV 225 HOCHDRUCK

DRV 225 pressure regulators, high-pressure type

Vlastnosti

Vstupný tlak	Max. 25 bar (Series 200 and 300 Series), Max. 40 bar (400 Series)
Rozsah teplôt	Max. 75 °C
Pomer redukcie	Max. 10:1 (200 Series), Max. 20:1 (300 Series), Max. 6:1 (400 Series)
Tesniaci materiál	NBR
kryt pružiny	Pressed brass up to DN 25, Grey cast iron from DN 32
Kryt	Red brass 2.1096.01



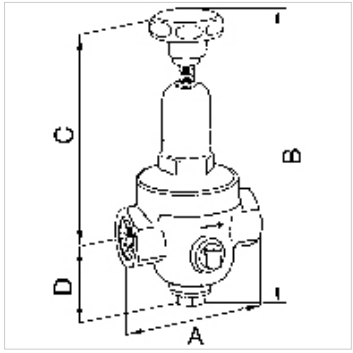

Poznámka

Ďalšie údaje na vyžiadanie.

Popis

Diaphragm pressure regulators with non-self-relieving design and non-pressure-reduced single-seated valve. Very precise adjustment. Good response characteristic because of only a few moving parts which hence minimal friction. Ideal for compressed air, nitrogen and other neutral, non-flammable gases, but only suitable for liquids with comparatively low flow rates.

Pokyny pre objednanie

Iné vyhotovenia na vyžiadanie

Dodatočné informácie

Ďalšie vyhotovenia na vyžiadanie

Výrobok

Označenie	Závit	Rozsah regulácie	Prietok kvs hodnota (m3/h)	A: (mm)	B	C (mm)	D: (mm)
K- 07 25 04 97	G 1/4	1.5 - 20 bar	0,5	70,0	188,0 mm	141,0	47,0
K- 07 25 04 98	G 3/8	1.5 - 20 bar	0,6	70,0	188,0 mm	141,0	47,0
K- 07 25 04 99	G 1/2	1.5 - 20 bar	1,2	85,0	228,5 mm	182,0	46,5
K- 07 25 05 00	G 3/4	1.5 - 20 bar	1,3	85,0	228,5 mm	182,0	46,5
K- 07 25 05 01	G 1	1.5 - 20 bar	1,6	95,0	257,0 mm	201,0	56,0
K- 07 25 05 02	G 1 1/4	1.5 - 20 bar	4,2	104,0	385,0 mm	324,0	61,0
K- 07 25 05 03	G 1 1/2	1.5 - 20 bar	4,5	108,0	392,0 mm	331,0	61,0
K- 07 25 05 04	G 2	1.5 - 20 bar	7,2	146,5	419,0 mm	349,0	70,0

Náhradné diely

K-VERSCHLEI-SATZ	Set of wearing parts

Napriek čo najstarostlivejšej kontrole nemôžeme vylúčiť chyby a nepreberáme žiadnu záruku za zahrnuté údaje.