K-ZFL ABSP-KLAPPEN EINFACH

Butterfly valves, with single-acting actuator - spring to close, min. pilot pressure 5 bar

Vlastnosti

Konštrukcia	Pneumatic actuators, in double- or single acting version
Prevádzkový tlak	Max. 16 bar
Prevádzková teplota	-15 °C to +120 °C
Médiá	Water / steam, salt water, salt water, ester, ketone, alkali, caustic soda, sodium hydroxide. Not recommended for hydrocarbons
Riadiaci tlak	5.5 bar
Adaptér ventila	Supplied as standard, operated by a 3/2- or 5/2-way valve
Uhol otočenia	90 °
pohon	aluminium eloxed
tesnenie pohonu	NBR
Kryt	Grey cast iron GG25 epoxy resin coated, RAL 5015
tesnenie	EPDM
hriadeľ	SS416
Tesnenie hriadeľa	EPDM
Ovládanie	



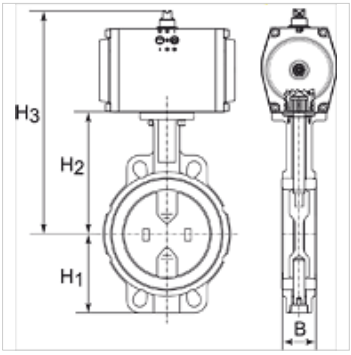

Poznámka

Ďalšie údaje na vyžiadanie.

Výrobok

Označenie	Podložka	DN	B (mm)	H1 (mm)	H2 (mm)	H3 (mm)	D (mm)
K- 07 30 03 36	Stainless Steel CF8M/1.4404	40	38,0	68,0	108,0	238,0	94,0
K- 07 30 03 37	Stainless Steel CF8M/1.4404	50	47,0	71,0	143,0	273,0	100,0
K- 07 30 03 38	Stainless Steel CF8M/1.4404	65	49,0	78,0	155,0	285,0	115,0
K- 07 30 03 39	Stainless Steel CF8M/1.4404	80	47,0	89,0	162,0	292,0	127,0
K- 07 30 03 40	Stainless Steel CF8M/1.4404	100	56,0	102,0	178,0	348,0	163,0
K- 07 30 03 42	Stainless Steel CF8M/1.4404	125	59,0	123,0	191,0	361,0	190,0
K- 07 30 03 44	Stainless Steel CF8M/1.4404	150	59,0	138,0	265,0	395,0	216,0

Napriek čo najstarostlivejšej kontrole nemôžeme vylúčiť chyby a nepreberáme žiadnu záruku za zahrnuté údaje.