K-S-BKR M ENTL-BOHR ABSCHL

Safety ball valves, lockable, with relief port

Vlastnosti

Prevádzková teplota	-10 °C to + 100 °C (depending on operating pressure)
Odvzdušňovací otvor	M 5 (>1": Relief port G 1/4")
Popis závitu	Rp thread acc. to EN 10226
Kryt	Nickel-plated brass
ručná páka	Steel - PVC coated
guľa	hardchrome-plated brass
Tesnenie gule	PTFE
Tesnenie vretena	PTFE



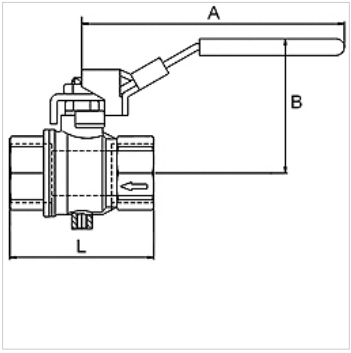

Poznámka

G thread acc. to DIN EN ISO 228-1, with ISO flange plate (acc. to ISO 5211)
Ďalšie údaje na vyžiadanie.

Popis

2/2-way safety ball valves, two parts, made of nickel-plated brass. Specially designed for pneumatic applications.
The valve shuts off the supply line and bleds the application area. Lockable hand lever in closed position.

Dodatočné informácie

The price does not include a padlock. Please order separately.

Výrobok

Označenie	DN	Závit	PN (bar)	A: (mm)	B (mm)	D (mm)
K- 07 30 29 29	8	Rp 1/4	14	96,0	49,0	45,0
K- 07 30 29 30	10	Rp 3/8	14	96,0	49,0	45,0
K- 07 30 29 31	15	Rp 1/2	14	96,0	51,0	59,0
K- 07 30 29 32	20	Rp 3/4	14	117,0	60,0	64,0
K- 07 30 29 33	25	Rp 1	14	117,0	64,0	81,0
K- 07 30 29 34	32	Rp 1 1/4	14	157,0	80,0	93,0
K- 07 30 29 35	40	Rp 1 1/2	14	157,0	86,0	102,0
K- 07 30 29 36	50	Rp 2	14	157,0	93,0	121,0

Príslušenstvo

K-VORHAENGESCHLOSS	Padlock

Napriek čo najstarostlivejšej kontrole nemôžeme vylúčiť chyby a nepreberáme žiadnu záruku za zahrnuté údaje.