K-WTEH 3-TLG PC SCHU VARIOBLOC

Service units, 3-piece with polycarbonate bowl and bowl guard

Vlastnosti

Vstupný tlak	Max. 16 bar (polycarbonate bowl), Max. 20 bar (metal bowl)
Teplota média	max. 50 °C
Teplota okolia	Max. 50 °C (polycarbonate bowl), Max. 80 °C (metal bowl)
Veľkosť pórov vo filtračnej vložke	40 µm
Tesniaci materiál	NBR
kryt pružiny	POM
Kryt	Die-cast zinc
Membrána	NBR
Vložka kvapkadla	PA
Drain valve	Manual
Meranie prietočného množstva	At P1 = 10 bar, P2 = 6 bar and pressure drop Δp = 1 bar



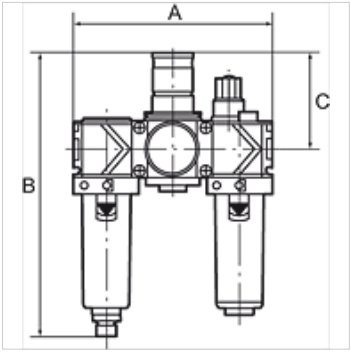

Poznámka

Ďalšie údaje na vyžiadanie.

Popis

Two or three-piece service units consisting of a reversible diaphragm pressure regulator, independent of inlet pressure, with self-relieving design, combined with a centrifugal separator and a proportional lubricator. Approved series in modern industrial design, with the following key benefits: Simple handling, Convenient modular assembly thanks to innovative fasteners, Excellent flow values.

Pokyny pre objednanie

Service units are also available with bowl guard or metal bowl. Service units are also available in other control ranges (0.5 - 6 bar and 0.5 - 16 bar) and in lockable version. Please ask for more information.

Dodatočné informácie

Service units are also available with bowl guard or metal bowl. Service units are also available in other control ranges.

Výrobok

Označenie	Závit	Rozsah regulácie	Prietok (L/min)	A: (mm)	B	C (mm)
K- 07 25 22 86	G 1/4	0.5 - 10 bar	1500	144,0	201,0 mm	68,0
K- 07 25 22 85	G 3/8	0.5 - 10 bar	1800	144,0	201,0 mm	68,0
K- 07 25 22 84	G 1/2	0.5 - 10 bar	3400	210,0	247,0 mm	98,0
K- 07 25 22 83	G 3/4	0.5 - 10 bar	5000	210,0	247,0 mm	98,0
K- 07 25 22 82	G 1	0.5 - 10 bar	5000	264,0	247,0 mm	98,0

Napriek čo najstarostlivejšej kontrole nemôžeme vylúčiť chyby a nepreberáme žiadnu záruku za zahrnuté údaje.