VN
Uvojni vijačni spoj

HANSA-FLEX

Lastnosti

Priključek 1	Zunanji navoj NPT
Oblika tesnila 1	tesni navoje
Priključek 2	metrični zunanji navoj, cilindrični
Oblika tesnila 2	24° notranji konus
Način izdelave	uvojni vijačni priključek
Oblika izdelave	ravno
Standard	DIN 2353 ISO 8434-1
Obseg dobave	nastavek s prekrivno matico in rezalnim obročem
Material:	jeklo
Zaščita površine	galvanično prevlečeno



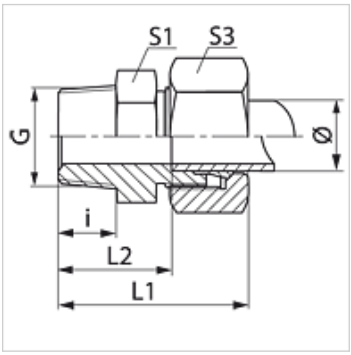

Navodilo

Za navodila za montažo, vgradnjo, obremenitev s tlakom in dovoljene temperature delovanja si, prosimo, oglejte tehnične podatke za navojne cevne priključke.

Artikel

Opis	Serija	Obratovalni tlak bar	Zunanji Ø cevi (mm)	G	i (mm)	L1 (mm)	L2 (mm)	S1	S3
VN 04 LL	LL	PN 100	4	1/8" -27 NPT	10,0	28,0	18,0	11	10
VN 05 LL	LL	PN 100	5	1/8" -27 NPT	10,0	28,0	16,5	11	12
VN 06 LL	LL	PN 100	6	1/8" -27 NPT	10,0	28,0	16,5	11	12
VN 08 LL	LL	PN 100	8	1/8" -27 NPT	10,0	30,0	18,5	12	14
VN NW 04 HL	L	PN 315	6	1/8" -27 NPT	10,0	32,0	17,0	12	14
VN NW 04 HL 1/4	L	PN 315	6	1/4" -18 NPT	15,0	38,0	23,0	17	14
VN NW 04 HL 3/8	L	PN 315	6	3/8" -18 NPT	15,0	39,0	24,0	19	14
VN NW 04 HL 1/2	L	PN 315	6	1/2" -14 NPT	20,0	44,0	29,0	24	14
VN NW 06 HL 1/8	L	PN 315	8	1/8" -27 NPT	10,0	38,0	23,0	12	17
VN NW 06 HL	L	PN 315	8	1/4" -18 NPT	15,0	38,0	23,0	17	17
VN NW 06 HL 3/8	L	PN 315	8	3/8" -18 NPT	15,5	39,0	24,0	19	17
VN NW 06 HL 1/2	L	PN 315	8	1/2" -14 NPT	20,0	44,0	29,0	24	17
VN NW 08 HL 1/8	L	PN 315	10	1/8" -27 NPT	15,5	39,5	25,0	17	19
VN NW 08 HL	L	PN 315	10	1/4" -18 NPT	15,0	39,0	24,0	17	19
VN NW 08 HL 3/8	L	PN 315	10	3/8" -18 NPT	15,2	40,0	25,0	19	19
VN NW 08 HL 1/2	L	PN 315	10	1/2" -14 NPT	20,0	45,0	30,0	24	19
VN NW 10 HL 1/8	L	PN 315	12	1/8" -27 NPT	15,0	40,0	25,0	19	22
VN NW 10 HL 1/4	L	PN 315	12	1/4" -18 NPT	15,0	40,0	25,0	19	22
VN NW 10 HL	L	PN 315	12	3/8" -18 NPT	15,5	40,0	25,0	19	22
VN NW 10 HL 1/2	L	PN 315	12	1/2" -14 NPT	20,0	45,0	30,0	24	22
VN NW 10 HL 3/4	L	PN 315	12	3/4" -14 NPT	20,0	45,0	32,0	27	22
VN NW 13 HL 1/4	L	PN 315	15	1/4" -18 NPT	15,0	40,0	25,0	24	22
VN NW 13 HL 3/8	L	PN 315	15	3/8" -18 NPT	15,5	41,5	26,5	24	27
VN NW 13 HL	L	PN 315	15	1/2" -14 NPT	20,0	46,0	31,0	24	27
VN NW 13 HL 3/4	L	PN 315	15	3/4" -14 NPT	20,0	46,0	32,0	27	27
VN NW 16 HL 1/4	L	PN 315	18	1/4" -18 NPT	15,0	32,0	25,0	27	32
VN NW 16 HL	L	PN 315	18	1/2" -14 NPT	20,0	48,0	31,5	27	32
VN NW 16 HL 3/4	L	PN 315	18	3/4" -14 NPT	20,0	48,5	32,0	27	32
VN NW 20 HL 1/2	L	PN 160	22	1/2" -14 NPT	20,0	50,0	33,5	32	36
VN NW 20 HL	L	PN 160	22	3/4" -14 NPT	20,0	50,0	33,5	32	36
VN NW 25 HL	L	PN 160	28	1" -11,5 NPT	25,0	56,0	39,5	41	41
VN NW 32 HL 1	L	PN 160	35	1" -11,5 NPT	25,0	62,0	40,5	46	50
VN NW 32 HL	L	PN 160	35	1,1/4" -11,5 NPT	25,5	62,0	40,5	46	50
VN NW 40 HL	L	PN 160	42	1,1/2" -11,5 NPT	26,0	65,0	42,0	55	60
VN NW 03 HS	S	PN 630	6	1/4" -18 NPT	15,0	43,0	28,0	17	17
VN NW 03 HS 1/2	S	PN 630	6	1/2" -14 NPT	20,0	50,0	35,0	24	17
VN NW 04 HS	S	PN 630	8	1/4" -18 NPT	15,0	43,0	28,0	17	19
VN NW 04 HS 3/8	S	PN 630	8	3/8" -18 NPT	15,5	43,0	28,0	19	19
VN NW 06 HS 1/4	S	PN 630	10	1/4" -18 NPT	15,0	44,0	27,5	19	22
VN NW 06 HS	S	PN 630	10	3/8" -18 NPT	15,5	44,0	27,5	19	22

Kljub skrbnemu preverjanju napak ne moremo izključiti in za informacije, ki so tu navedene, ne prevzemamo nobene odgovornosti.

VN
Uvojni vijačni spoj

Artikel

Opis	Serija	Obratovalni tlak bar	Zunanji Ø cevi (mm)	G	i (mm)	L1 (mm)	L2 (mm)	S1	S3
VN NW 06 HS 1/2	S	PN 400	10	1/2" -14 NPT	20,0	51,0	34,5	24	22
VN NW 08 HS 1/4	S	PN 630	12	1/4" -18 NPT	15,1	46,0	29,5	22	24
VN NW 08 HS	S	PN 630	12	3/8" -18 NPT	15,5	46,0	29,5	22	24
VN NW 08 HS 1/2	S	PN 630	12	1/2" -14 NPT	20,0	51,0	34,5	24	24
VN NW 10 HS 3/8	S	PN 630	14	3/8" -18 NPT	15,5	54,0	36,0	24	27
VN NW 10 HS	S	PN 630	14	1/2" -14 NPT	20,0	54,0	36,0	24	27
VN NW 13 HS	S	PN 400	16	1/2" -14 NPT	20,0	54,0	35,5	27	30
VN NW 13 HS 3/4	S	PN 400	16	3/4" -14 NPT	20,0	56,0	37,5	32	30
VN NW 16 HS 1/2	S	PN 400	20	1/2" -14 NPT	20,0	59,0	37,5	32	30
VN NW 16 HS	S	PN 400	20	3/4" -14 NPT	20,0	59,0	37,5	32	36
VN NW 16 HS 1	S	PN 400	20	1" -11,5 NPT	25,0	66,0	44,5	41	36
VN NW 20 HS 3/4	S	PN 400	25	3/4" -14 NPT	20,0	64,0	40,0	41	46
VN NW 20 HS	S	PN 400	25	1" -11,5 NPT	25,0	69,0	45,0	41	46
VN NW 20 HS 1 1/4	S	PN 400	25	1,1/4" -11,5 NPT	25,5	69,0	45,5	46	46
VN NW 25 HS 1	S	PN 400	30	1" -11,5 NPT	25,0	66,5	40,0	46	50
VN NW 25 HS	S	PN 400	30	1,1/4" -11,5 NPT	25,5	73,0	46,5	46	50
VN NW 32 HS	S	PN 315	38	1,1/2" -11,5 NPT	26,0	80,0	49,0	55	60

serija: LL = zelo lahko L = lahko S = težko – PN = nazivni tlak PB = maks. obratovalni tlak – Ø = zunanji premer cevi

Variante izdelka

VN MG	Uvojni vijačni priključek, med
VN VA	Uvojni vijačni priključek, nerjavno jeklo
XVN	Uvojni vijačni spoj, jeklo

Kljub skrbnemu preverjanju napak ne moremo izključiti in za informacije, ki so tu navedene, ne prevzemamo nobene odgovornosti.