XVN VA
Uvojni vijačni spoj

HANSA-FLEX

Lastnosti

Priključek 1	Zunanji navoj NPT
Oblika tesnila 1	tesni navoje
Priključek 2	metrični zunanji navoj, cilindrični
Oblika tesnila 2	24° notranji konus
Način izdelave	uvojni vijačni priključek
Oblika izdelave	ravno
Standard	DIN 2353 ISO 8434-1
Obseg dobave	nastavek (brez prekrivne matice in rezalnega obroča)
Material:	nerjavno jeklo



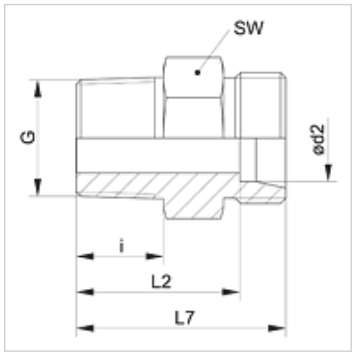

Navodilo

Za navodila za montažo, vgradnjo, obremenitev s tlakom in dovoljene temperature delovanja si, prosimo, oglejte tehnične podatke za navojne cevne priključke.

Artikel

Opis	Serija	Obratovalni tlak bar	Ø d2 (mm)	G	i (mm)	L2 (mm)	L7 (mm)	SW (mm)
XVN 04 LL VA	LL	PN 100	4	1/8" -27 NPT	10,0	18,0	22,0	11
XVN 06 LL VA	LL	PN 100	6	1/8" -27 NPT	10,0	16,5	22,0	11
XVN 08 LL VA	LL	PN 100	8	1/8" -27 NPT	10,0	18,5	24,0	12
XVN NW 04 HL VA	L	PN 315	6	1/8" -27 NPT	10,0	17,0	24,0	12
XVN NW 04 HL 1/4 VA	L	PN 315	6	1/4" -18 NPT	15,0	23,0	30,0	17
XVN NW 04 HL 3/8 VA	L	PN 315	6	3/8" -18 NPT	15,3	24,0	31,0	19
XVN NW 04 HL 1/2 VA	L	PN 315	6	1/2" -14 NPT	20,0	29,0	36,0	24
XVN NW 06 HL 1/8 VA	L	PN 315	8	1/8" -27 NPT	10,0	18,0	25,0	17
XVN NW 06 HL VA	L	PN 315	8	1/4" -18 NPT	15,0	23,0	30,0	17
XVN NW 06 HL 3/8 VA	L	PN 315	8	3/8" -18 NPT	15,3	24,0	31,0	19
XVN NW 06 HL 1/2 VA	L	PN 315	8	1/2" -14 NPT	20,0	29,0	36,0	24
XVN NW 08 HL 1/8 VA	L	PN 315	10	1/8" -27 NPT	10,0	19,0	26,0	17
XVN NW 08 HL VA	L	PN 315	10	1/4" -18 NPT	15,0	24,0	31,0	17
XVN NW 08 HL 3/8 VA	L	PN 315	10	3/8" -18 NPT	15,3	25,0	32,0	19
XVN NW 08 HL 1/2 VA	L	PN 315	10	1/2" -14 NPT	20,0	30,0	37,0	24
XVN NW 08 HL 3/4 VA	L	PN 315	10	3/4" -14 NPT	20,2	31,0	38,0	27
XVN NW 10 HL 1/8 VA	L	PN 315	12	1/8" -27 NPT	10,0	19,5	26,5	19
XVN NW 10 HL 1/4 VA	L	PN 315	12	1/4" -18 NPT	15,0	25,0	32,0	19
XVN NW 10 HL VA	L	PN 315	12	3/8" -18 NPT	15,3	25,0	32,0	19
XVN NW 10 HL 1/2 VA	L	PN 315	12	1/2" -14 NPT	20,0	30,0	37,0	24
XVN NW 10 HL 3/4 VA	L	PN 315	12	3/4" -14 NPT	20,2	31,0	38,0	27
XVN NW 13 HL 1/4 VA	L	PN 315	15	1/4" -18 NPT	15,0	26,0	33,0	24
XVN NW 13 HL 3/8 VA	L	PN 315	15	3/8" -18 NPT	15,3	26,5	33,5	24
XVN NW 13 HL VA	L	PN 315	15	1/2" -14 NPT	20,0	31,0	38,0	24
XVN NW 13 HL 3/4 VA	L	PN 315	15	3/4" -14 NPT	20,2	32,0	39,0	27
XVN NW 13 HL 1 VA	L	PN 315	15	1" -11,5 NPT	25,0	37,5	44,5	36
XVN NW 16 HL 3/8 VA	L	PN 315	18	3/8" -18 NPT	15,3	27,0	34,5	27
XVN NW 16 HL VA	L	PN 315	18	1/2" -14 NPT	20,0	31,5	39,0	27
XVN NW 16 HL 3/4 VA	L	PN 315	18	3/4" -14 NPT	20,2	31,5	39,0	27
XVN NW 16 HL 1 VA	L	PN 315	18	1" -11,5 NPT	25,0	37,0	44,5	36
XVN NW 20 HL 3/8 VA	L	PN 160	22	3/8" -18 NPT	15,3	29,0	36,5	32
XVN NW 20 HL 1/2 VA	L	PN 160	22	1/2" -14 NPT	20,0	33,5	41,0	32
XVN NW 20 HL VA	L	PN 160	22	3/4" -14 NPT	20,2	33,5	41,0	32
XVN NW 20 HL 1 VA	L	PN 160	22	1" -11,5 NPT	25,0	39,0	46,5	36
XVN NW 20 HL 1 1/4 VA	L	PN 160	22	1,1/4" -11,5 NPT	25,6	41,5	49,0	46
XVN NW 25 HL 1/2 VA	L	PN 160	28	1/2" -14 NPT	20,0	34,5	24,0	41
XVN NW 25 HL 3/4 VA	L	PN 160	28	3/4" -14 NPT	20,2	34,5	42,0	41
XVN NW 25 HL VA	L	PN 160	28	1" -11,5 NPT	25,0	39,5	47,0	41
XVN NW 25 HL 11/4 VA	L	PN 160	28	1,1/4" -11,5 NPT	25,6	41,5	49,0	46
XVN NW 32 HL 3/4 VA	L	PN 160	35	3/4" -14 NPT	20,2	35,0	45,5	46
XVN NW 32 HL 1 VA	L	PN 160	35	1" -11,5 NPT	25,0	40,0	50,5	46
XVN NW 32 HL VA	L	PN 160	35	1,1/4" -11,5 NPT	25,6	40,5	51,0	46
XVN NW 32 HL 1 1/2 VA	L	PN 160	35	1,1/2" -11,5 NPT	26,0	42,5	53,0	55

Kljub skrbnemu preverjanju napak ne moremo izključiti in za informacije, ki so tu navedene, ne prevzemamo nobene odgovornosti.

XVN VA
Uvojni vijačni spoj

HANSA-FLEX

Artikel

Opis	Serija	Obratovalni tlak bar	Ø d2 (mm)	G	i (mm)	L2 (mm)	L7 (mm)	SW (mm)
XVN NW 40 HL 1 VA	L	PN 160	42	1" -11,5 NPT	25,0	41,0	52,0	55
XVN NW 40 HL 11/4 VA	L	PN 160	42	1,1/4" -11,5 NPT	25,6	41,5	52,5	55
XVN NW 40 HL VA	L	PN 160	42	1,1/2" -11,5 NPT	26,0	42,0	53,0	55
XVN NW 03 HS 1/8 VA	S	PN 630	6	1/8" -27 NPT	10,0	23,0	30,0	17
XVN NW 03 HS VA	S	PN 630	6	1/4" -18 NPT	15,0	28,0	35,0	17
XVN NW 03 HS 1/2 VA	S	PN 630	6	1/2" -14 NPT	20,0	35,0	42,0	24
XVN NW 03 HS 3/8 VA	S	PN 630	6	3/8" -18 NPT	15,3	28,0	35,0	19
XVN NW 04 HS 1/8 VA	S	PN 630	8	1/8" -27 NPT	10,0	23,0	30,0	17
XVN NW 04 HS 3/8 VA	S	PN 630	8	3/8" -18 NPT	15,3	28,0	35,0	19
XVN NW 04 HS VA	S	PN 630	8	1/4" -18 NPT	15,0	28,0	35,0	17
XVN NW 04 HS 1/2 VA	S	PN 630	8	1/2" -14 NPT	20,0	35,0	42,0	24
XVN NW 06 HS 1/8 VA	S	PN 630	10	1/8" -27 NPT	10,0	22,5	30,0	19
XVN NW 06 HS 1/4 VA	S	PN 630	10	1/4" -18 NPT	15,0	27,5	35,0	19
XVN NW 06 HS VA	S	PN 630	10	3/8" -18 NPT	15,3	27,5	35,0	19
XVN NW 06 HS 1/2 VA	S	PN 400	10	1/2" -14 NPT	20,0	34,5	42,0	24
XVN NW 06 HS 3/4 VA	S	PN 630	10	3/4" -14 NPT	20,2	36,5	44,0	32
XVN NW 08 HS 1/4 VA	S	PN 630	12	1/4" -18 NPT	15,0	29,0	36,5	22
XVN NW 08 HS 3/4 VA	S	PN 630	12	3/4" -14 NPT	20,0	36,5	44,0	32
XVN NW 08 HS VA	S	PN 630	12	3/8" -18 NPT	15,3	29,5	37,0	22
XVN NW 08 HS 1/2 VA	S	PN 630	12	1/2" -14 NPT	20,0	34,5	42,0	24
XVN NW 10 HS 3/8 VA	S	PN 630	14	3/8" -18 NPT	15,3	31,5	39,5	24
XVN NW 10 HS VA	S	PN 630	14	1/2" -14 NPT	20,0	36,0	44,0	24
XVN NW 10 HS 3/4 VA	S	PN 630	14	3/4" -14 NPT	20,2	38,0	46,0	32
XVN NW 10 HS 1 VA	S	PN 630	14	1" -11,5 NPT	25,0	45,0	53,0	41
XVN NW 13 HS VA	S	PN 400	16	1/2" -14 NPT	20,0	35,5	44,0	27
XVN NW 13 HS 3/8 VA	S	PN 400	16	3/8" -18 NPT	15,3	31,0	39,5	27
XVN NW 13 HS 3/4 VA	S	PN 400	16	3/4" -14 NPT	20,2	37,5	46,0	32
XVN NW 13 HS 1 VA	S	PN 400	16	1" -11,5 NPT	25,0	44,5	53,0	41
XVN NW 16 HS 3/8 VA	S	PN 400	20	3/8" -18 NPT	15,3	33,0	43,5	32
XVN NW 16 HS 1/2 VA	S	PN 400	20	1/2" -14 NPT	20,0	37,5	48,0	32
XVN NW 16 HS VA	S	PN 400	20	3/4" -14 NPT	20,2	37,5	48,0	32
XVN NW 16 HS 1 VA	S	PN 400	20	1" -11,5 NPT	25,0	44,5	55,0	41
XVN NW 16 HS 1 1/4 VA	S	PN 400	20	1,1/4" -11,5 NPT	25,6	45,5	56,0	46
XVN NW 20 HS 3/4 VA	S	PN 400	25	3/4" -14 NPT	20,2	40,0	52,0	41
XVN NW 20 HS VA	S	PN 400	25	1" -11,5 NPT	25,0	45,0	57,0	41
XVN NW 20 HS 1/2 VA	S	PN 400	25	1/2" -14 NPT	20,0	40,0	52,0	41
XVN NW 20 HS 1 1/4 VA	S	PN 400	25	1,1/4" -11,5 NPT	25,6	46,0	58,0	46
XVN NW 20 HS 1 1/2 VA	S	PN 400	25	1,1/2" -11,5 NPT	26,0	49,0	61,0	55
XVN NW 25 HS VA	S	PN 400	30	1,1/4" -11,5 NPT	25,6	46,5	60,0	46
XVN NW 25 HS 3/4 VA	S	PN 400	30	3/4" -14 NPT	20,2	41,0	54,5	46
XVN NW 25 HS 1 VA	S	PN 400	30	1" -11,5 NPT	25,0	46,0	59,5	46
XVN NW 25 HS 1 1/2 VA	S	PN 400	30	1,1/2" -11,5 NPT	26,0	49,5	63,0	55
XVN NW 32 HS 1 VA	S	PN 315	38	1" -11,5 NPT	25,0	48,0	64,0	55
XVN NW 32 HS VA	S	PN 315	38	1,1/2" -11,5 NPT	26,0	49,0	65,0	55
XVN NW 32 HS 1 1/4 VA	S	PN 315	38	1,1/4" -11,5 NPT	25,6	48,5	64,5	55

serija: LL = zelo lahko L = lahko S = težko – PN = nazivni tlak PB = maks. obratovalni tlak – Ø d2 = zunanji premer cevi

Variante izdelka

XVN	Uvojni vijačni spoj, jeklo
VN VA	Uvojni vijačni priključek, nerjavno jeklo

Kljub skrbnemu preverjanju napak ne moremo izključiti in za informacije, ki so tu navedene, ne prevzemamo nobene odgovornosti.