G AJ HB
Vezniki

Lastnosti

Priključek 1	matični navoj UN/UNF
Oblika tesnila 1	74° notranji konus
Priključek 2	zunanji navoj cilindrični BSP
Oblika tesnila 2	60° notranji konus
Način izdelave	vezniki
Oblika izdelave	ravno
Material:	jeklo
Zaščita površine	galvanično prevlečeno



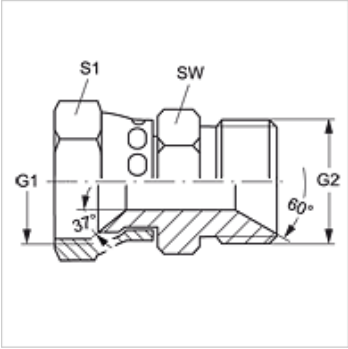

Artikel

Opis	G1	G2	SW (mm)	S1
G AJ 04 HB 02	7/16" -20 UNF	G 1/8" -28	14	17
G AJ 04 HB	7/16" -20 UNF	G 1/4" -19	19	17
G AJ 04 HB 06	7/16" -20 UNF	G 3/8" -19	22	17
G AJ 04 HB 08	7/16" -20 UNF	G 1/2" -14	27	17
G AJ 05 HB 04	1/2" -20 UNF	G 1/4" -19	19	17
G AJ 06 HB 04	9/16" -18 UNF	G 1/4" -19	19	19
G AJ 06 HB	9/16" -18 UNF	G 3/8" -19	22	19
G AJ 06 HB 08	9/16" -18 UNF	G 1/2" -14	27	19
G AJ 08 HB 04	3/4" -16 UNF	G 1/4" -19	19	24
G AJ 08 HB 06	3/4" -16 UNF	G 3/8" -19	22	24
G AJ 08 HB	3/4" -16 UNF	G 1/2" -14	27	24
G AJ 08 HB 12	3/4" -16 UNF	G 3/4" -14	32	24
G AJ 10 HB 06	7/8" -14 UNF	G 3/8" -19	22	27
G AJ 10 HB 08	7/8" -14 UNF	G 1/2" -14	27	27
G AJ 10 HB	7/8" -14 UNF	G 5/8" -14	30	27
G AJ 10 HB 12	7/8" -14 UNF	G 3/4" -14	32	27
G AJ 12 HB 08	1.1/16" -12 UN	G 1/2" -14	27	32
G AJ 12 HB	1.1/16" -12 UN	G 3/4" -14	32	32
G AJ 12 HB 16	1.1/16" -12 UN	G 1" -11	41	32
G AJ 16 HB 12	1,5/16" -12 UN	G 3/4" -14	32	41
G AJ 16 HB	1,5/16" -12 UN	G 1" -11	46	41
G AJ 20 HB	1,5/8" -12 UN	G 1,1/4" -11	50	50
G AJ 24 HB	1,7/8" -12 UN	G 1,1/2" -11	55	55
G AJ 32 HB	2,1/2" -12 UN	G 2" -11	70	70

SW, S1, S2 = ključna širina

Kljub skrbnemu preverjanju napak ne moremo izključiti in za informacije, ki so tu navedene, ne prevzemamo nobene odgovornosti.