# GE HB HN
Nastavek na uvoj

HANSA-FLEX

## Lastnosti

| | |
|---|---|
| **Priključek 1** | zunanji navoj cilindrični BSP |
| **Oblika tesnila 1** | 60° notranji konus |
| **Priključek 2** | Zunanji navoj NPT |
| **Oblika tesnila 2** | tesni navoje |
| **Način izdelave** | uvojni cevni nastavek |
| **Oblika izdelave** | ravno |
| **Material:** | jeklo |
| **Zaščita površine** | galvanično prevlečeno |



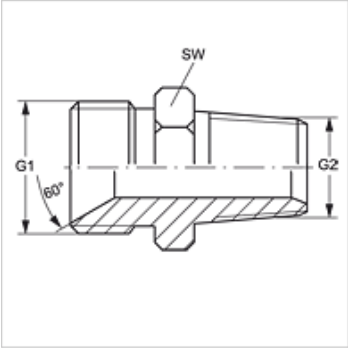


## Artikel

| Opis | G1 | G2 | SW (mm) |
|---|---|---|---|
| **GE HB 02 HN** | G 1/8" -28 | 1/8" -27 NPT | 11 |
| **GE HB 02 HN 04** | G 1/8" -28 | 1/4" -18 NPT | 17 |
| **GE HB 04 HN 02** | G 1/4" -19 | 1/8" -27 NPT | 17 |
| **GE HB 04 HN** | G 1/4" -19 | 1/4" -18 NPT | 17 |
| **GE HB 04 HN 06** | G 1/4" -19 | 3/8" -18 NPT | 17 |
| **GE HB 04 HN 08** | G 1/4" -19 | 1/2" -14 NPT | 22 |
| **GE HB 04 HN 12** | G 1/4" -19 | 3/4" -14 NPT | 27 |
| **GE HB 06 HN 02** | G 3/8" -19 | 1/8" -27 NPT | 17 |
| **GE HB 06 HN 04** | G 3/8" -19 | 1/4" -18 NPT | 17 |
| **GE HB 06 HN** | G 3/8" -19 | 3/8" -18 NPT | 17 |
| **GE HB 06 HN 08** | G 3/8" -19 | 1/2" -14 NPT | 22 |
| **GE HB 06 HN 12** | G 3/8" -19 | 3/4" -14 NPT | 27 |
| **GE HB 06 HN 16** | G 3/8" -19 | 1" -11,5 NPT | 36 |
| **GE HB 08 HN 04** | G 1/2" -14 | 1/4" -18 NPT | 22 |
| **GE HB 08 HN 06** | G 1/2" -14 | 3/8" -18 NPT | 22 |
| **GE HB 08 HN** | G 1/2" -14 | 1/2" -14 NPT | 22 |
| **GE HB 08 HN 12** | G 1/2" -14 | 3/4" -14 NPT | 27 |
| **GE HB 08 HN 16** | G 1/2" -14 | 1" -11,5 NPT | 36 |
| **GE HB 10 HN 08** | G 5/8" -14 | 1/2" -14 NPT | 27 |
| **GE HB 10 HN 12** | G 5/8" -14 | 3/4" -14 NPT | 27 |
| **GE HB 12 HN 04** | G 3/4" -14 | 1/4" -18 NPT | 27 |
| **GE HB 12 HN 06** | G 3/4" -14 | 3/8" -18 NPT | 27 |
| **GE HB 12 HN 08** | G 3/4" -14 | 1/2" -14 NPT | 27 |
| **GE HB 12 HN** | G 3/4" -14 | 3/4" -14 NPT | 27 |
| **GE HB 12 HN 16** | G 3/4" -14 | 1" -11,5 NPT | 36 |
| **GE HB 12 HN 20** | G 3/4" -14 | 1,1/4" -11,5 NPT | 46 |
| **GE HB 16 HN 08** | G 1" -11 | 1/2" -14 NPT | 36 |
| **GE HB 16 HN 12** | G 1" -11 | 3/4" -14 NPT | 36 |
| **GE HB 16 HN** | G 1" -11 | 1" -11,5 NPT | 36 |
| **GE HB 16 HN 20** | G 1" -11 | 1,1/4" -11,5 NPT | 46 |
| **GE HB 16 HN 24** | G 1" -11 | 1,1/2" -11,5 NPT | 50 |
| **GE HB 16 HN 32** | G 1" -11 | 2" -11,5 NPT | 65 |
| **GE HB 20 HN 12** | G 1,1/4" -11 | 3/4" -14 NPT | 46 |
| **GE HB 20 HN 16** | G 1,1/4" -11 | 1" -11,5 NPT | 46 |
| **GE HB 20 HN** | G 1,1/4" -11 | 1,1/4" -11,5 NPT | 46 |
| **GE HB 20 HN 24** | G 1,1/4" -11 | 1,1/2" -11,5 NPT | 50 |
| **GE HB 24 HN 16** | G 1,1/2" -11 | 1" -11,5 NPT | 50 |
| **GE HB 24 HN 20** | G 1,1/2" -11 | 1,1/4" -11,5 NPT | 50 |
| **GE HB 24 HN** | G 1,1/2" -11 | 1,1/2" -11,5 NPT | 50 |
| **GE HB 24 HN 32** | G 1,1/2" -11 | 2" -11,5 NPT | 65 |
| **GE HB 32 HN 20** | G 2" -11 | 1,1/4" -11,5 NPT | 65 |
| **GE HB 32 HN 24** | G 2" -11 | 1,1/2" -11,5 NPT | 65 |
| **GE HB 32 HN** | G 2" -11 | 2" -11,5 NPT | 65 |

SW = ključna širina

## Variante izdelka

| | |
|---|---|
| **GE HB HN VA** | Nastavek na uvoj, nerjavno jeklo |

*Kljub skrbnemu preverjanju napak ne moremo izključiti in za informacije, ki so tu navedene, ne prevzemamo nobene odgovornosti.*