GE HB HR
Nastavek na uvoj

Lastnosti

Priključek 1	zunanji navoj cilindrični BSP
Oblika tesnila 1	60° notranji konus
Priključek 2	zunanji navoj cilindrični BSP
Oblika tesnila 2	ploščato tesnjenje
Način izdelave	uvojni cevni nastavek
Oblika izdelave	ravno
Material:	jeklo
Zaščita površine	galvanično prevlečeno



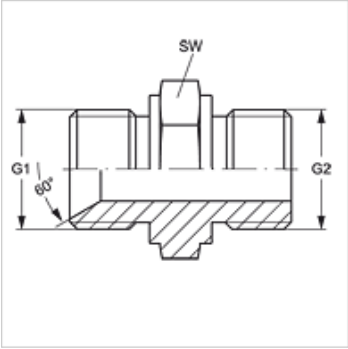

Artikel

Opis	G1	G2	SW (mm)
GE HB 04 HR 02	G 1/4" -19	G 1/8" -28	14
GE HB 04 HR	G 1/4" -19	G 1/4" -19	19
GE HB 04 HR 06	G 1/4" -19	G 3/8" -19	22
GE HB 06 HR 04	G 3/8" -19	G 1/4" -19	19
GE HB 06 HR	G 3/8" -19	G 3/8" -19	22
GE HB 08 HR 06	G 1/2" -14	G 3/8" -19	22
GE HB 08 HR	G 1/2" -14	G 1/2" -14	27
GE HB 08 HR 12	G 1/2" -14	G 3/4" -14	27
GE HB 10 HR 08	G 5/8" -14	G 1/2" -14	27
GE HB 10 HR	G 5/8" -14	G 5/8" -14	30
GE HB 10 HR 12	G 5/8" -14	G 3/4" -14	32
GE HB 12 HR 08	G 3/4" -14	G 1/2" -14	27
GE HB 12 HR 10	G 3/4" -14	G 5/8" -14	30
GE HB 12 HR	G 3/4" -14	G 3/4" -14	32
GE HB 16 HR 12	G 1" -11	G 3/4" -14	36
GE HB 16 HR	G 1" -11	G 1" -11	41
GE HB 20 HR 16	G 1,1/4" -11	G 1" -11	46
GE HB 20 HR	G 1,1/4" -11	G 1,1/4" -11	50
GE HB 24 HR 20	G 1,1/2" -11	G 1,1/4" -11	50
GE HB 24 HR	G 1,1/2" -11	G 1,1/2" -11	55

SW = ključna širina

Kljub skrbnemu preverjanju napak ne moremo izključiti in za informacije, ki so tu navedene, ne prevzemamo nobene odgovornosti.