# GE HN AJ VA
Uvojni cevni nastavek

## Lastnosti

| | |
|---|---|
| **Priključek 1** | Zunanji navoj NPT |
| **Oblika tesnila 1** | tesni navoje |
| **Priključek 2** | matični navoj UN/UNF |
| **Oblika tesnila 2** | 74° notranji konus |
| **Način izdelave** | uvojni cevni nastavek |
| **Oblika izdelave** | ravno |
| **Material:** | nerjavno jeklo |



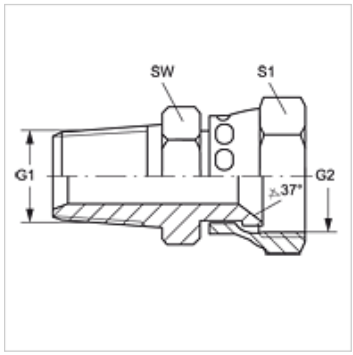


## Artikel

| Opis | G1 | G2 | SW (mm) | S1 |
|---|---|---|---|---|
| **GE HN 02 AJ 04 VA** | 1/8" -27 NPT | 7/16" -20 UNF | 14 | 14 |
| **GE HN 02 AJ 05 VA** | 1/8" -27 NPT | 1/2" -20 UNF | 14 | 17 |
| **GE HN 02 AJ 06 VA** | 1/8" -27 NPT | 9/16" -18 UNF | 17 | 14 |
| **GE HN 04 AJ VA** | 1/4" -18 NPT | 7/16" -20 UNF | 14 | 14 |
| **GE HN 04 AJ 05 VA** | 1/4" -18 NPT | 1/2" -20 UNF | 16 | 16 |
| **GE HN 04 AJ 06 VA** | 1/4" -18 NPT | 9/16" -18 UNF | 17 | 17 |
| **GE HN 04 AJ 08 VA** | 1/4" -18 NPT | 3/4" -16 UNF | 19 | 22 |
| **GE HN 06 AJ 04 VA** | 3/8" -18 NPT | 7/16" -20 UNF | 19 | 14 |
| **GE HN 06 AJ 05 VA** | 3/8" -18 NPT | 1/2" -20 UNF | 19 | 17 |
| **GE HN 06 AJ VA** | 3/8" -18 NPT | 9/16" -18 UNF | 19 | 17 |
| **GE HN 06 AJ 08 VA** | 3/8" -18 NPT | 3/4" -16 UNF | 22 | 22 |
| **GE HN 06 AJ 10 VA** | 3/8" -18 NPT | 7/8" -14 UNF | 22 | 27 |
| **GE HN 08 AJ 06 VA** | 1/2" -14 NPT | 9/16" -18 UNF | 25 | 19 |
| **GE HN 08 AJ VA** | 1/2" -14 NPT | 3/4" -16 UNF | 22 | 22 |
| **GE HN 08 AJ 10 VA** | 1/2" -14 NPT | 7/8" -14 UNF | 25 | 25 |
| **GE HN 08 AJ 12 VA** | 1/2" -14 NPT | 1.1/16" -12 UN | 27 | 32 |
| **GE HN 12 AJ 08 VA** | 3/4" -14 NPT | 3/4" -16 UNF | 27 | 22 |
| **GE HN 12 AJ 10 VA** | 3/4" -14 NPT | 7/8" -14 UNF | 32 | 27 |
| **GE HN 12 AJ VA** | 3/4" -14 NPT | 1.1/16" -12 UN | 27 | 32 |
| **GE HN 12 AJ 16 VA** | 3/4" -14 NPT | 1,5/16" -12 UN | 32 | 38 |
| **GE HN 16 AJ 12 VA** | 1" -11,5 NPT | 1.1/16" -12 UN | 27 | 38 |
| **GE HN 16 AJ VA** | 1" -11,5 NPT | 1,5/16" -12 UN | 36 | 38 |
| **GE HN 20 AJ VA** | 1,1/4" -11,5 NPT | 1,5/8" -12 UN | 46 | 50 |
| **GE HN 24 AJ VA** | 1,1/2" -11,5 NPT | 1,7/8" -12 UN | 58 | 58 |

SW, S1, S2 = ključna širina

## Variante izdelka

| | |
|---|---|
| **GE HN AJ** | Uvojni cevni nastavek, jeklo |

*Kljub skrbnemu preverjanju napak ne moremo izključiti in za informacije, ki so tu navedene, ne prevzemamo nobene odgovornosti.*