WTF B

Strgalo, WTF-B

Lastnosti

Način izdelave	Strgalo
Drsna hitrost max.	15,0 m/s
Temperatura min.	-30 °C
Temperatura max.	110 °C
Sredstva	Mineralna olja
Montaža	prvi tesnilni obroč in nato obroč iz PTFE oblikujte v obliki ledvice in potisnite v utor (od 30 mm dalje)
Material:	(1) Dinamično tesnilo: PTBR (2) Statično tesnilo: NBR
Uporaba	Hidravlika



Toleranz / Tolerance			
d	D	C	L
f8 / h9	H9	H11	0 +0,20

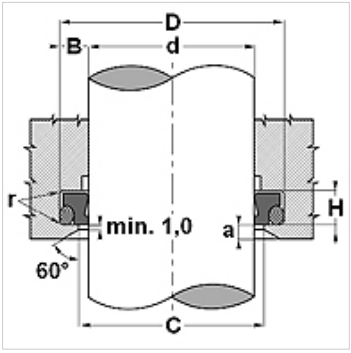

Opis

majhno drsno trenje
Ni sunkovitega gibanja.
potrebuje malo prostora
dolga življenjska doba
Extreme temperatures -45°C to 200°C with Viton O-ring.
zelo dobro strganje od znotraj proti preostalemu oljnemu filmu na površini batnice.

Artikel

Opis	d (mm)	D (mm)	H (mm)	C (mm)
WTF 0080 B554470	8	12,8	3,7	10,7
WTF 0100 B554470	10	14,8	3,7	12,7
WTF 0120 B554470	12	18,8	5,0	15,5
WTF 0140 B554470	14	20,8	5,0	17,5
WTF 0150 B554470	15	21,8	5,0	18,5
WTF 0160 B554470	16	22,8	5,0	19,5
WTF 0180 B554470	18	24,8	5,0	21,5
WTF 0200 B554470	20	26,8	5,0	23,5
WTF 0220 B554470	22	28,8	5,0	23,5
WTF 0250 B554470	25	31,8	5,0	28,5
WTF 0280 B554470	28	34,8	5,0	31,5
WTF 0300 B554470	30	36,8	5,0	33,5
WTF 0320 B554470	32	38,8	5,0	35,5
WTF 0350 B554470	35	41,8	5,0	38,5
WTF 0400 B554470	40	46,8	5,0	43,5
WTF 0420 B554470	42	48,8	5,0	45,5
WTF 0450 B554470	45	51,8	5,0	48,5
WTF 0500 B554470	50	56,8	5,0	53,5
WTF 0550 B554470	55	61,8	5,0	58,5
WTF 0600 B554470	60	66,8	5,0	63,5
WTF 0650 B554470	65	73,8	6,0	69,0
WTF 0700 B554470	70	78,8	6,0	74,0
WTF 0750 B554470	75	83,8	6,0	79,0
WTF 0800 B554470	80	88,8	6,0	84,0
WTF 0850 B554470	85	93,8	6,0	89,0
WTF 0900 B554470	90	98,8	6,0	94,0
WTF 0950 B554470	95	103,8	6,0	99,0
WTF 1000 B554470	100	108,8	6,0	104,0
WTF 1050 B554470	105	113,8	6,0	109,0
WTF 1100 B554470	110	118,8	6,0	114,0
WTF 1200 B554470	120	128,8	6,0	124,0
WTF 1500 B554470	150	158,8	6,0	154,0
WTF 1530 B554470	153	161,8	6,0	157,0
WTF 1700 B554470	170	178,8	6,0	174,0
WTF 1730 B554470	173	181,8	6,0	177,0
WTF 2100 B554470	210	218,8	6,0	214,0
WTF 2400 B554470	240	248,8	6,0	244,0

Kljub skrbnemu preverjanju napak ne moremo izključiti in za informacije, ki so tu navedene, ne prevzemamo nobene odgovornosti.