K-SCHL-AUFROLLER LU WA L

Hose reels for compressed air and water, lightweight type

Lastnosti

Material cevi	PVC
Obratovalni tlak	max. 12 bar (K-07100622); max. 20 bar (K-07100623)
delovna temperatura	max. +60 °C
vhodni nastavek	G 1/4
kot zasuka	180°



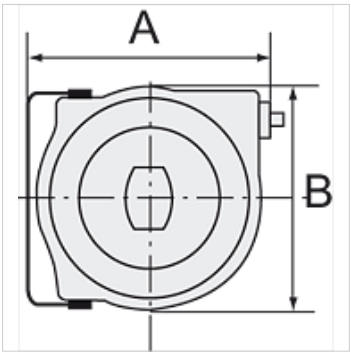

Navodilo

Drugi podatki na zahtevo.

Opis

High-quality, impact-resistant polypropylene housing. An automatic latching mechanism allows the hose to be engaged at any length. Enclosed spring. Precise locking device for continuous feeding or stop function. Reel guide prevents excessive wear on the hose.

Artikel

Opis	mera cevi	A (mm)	B (mm)	dolžina cevi (m)
K- 07 10 06 22	12 mm x 8 mm	340,0	311,0	8
K- 07 10 06 23	12 mm x 6 mm	445,0	400,0	15

Kljub skrbnemu preverjanju napak ne moremo izključiti in za informacije, ki so tu navedene, ne prevzemamo nobene odgovornosti.