K-SCHL-AUFROLLER WASSER

Hose reels for water

Lastnosti

Material cevi	Braided PVC
Obratovalni tlak	Max. 9 bar
delovna temperatura	+5 °C to +60 °C
kot zasuka	300°



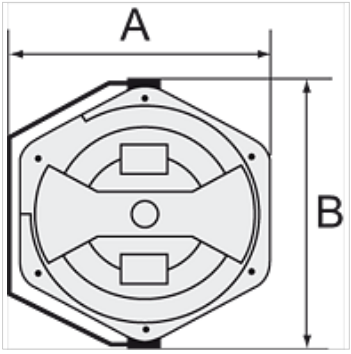

Navodilo

Drugi podatki na zahtevo.

Opis

For easy mounting on the wall or ceiling. Closed, rugged, impact-resistant housing made of POM, supply/outlet R 1/4 male thread and lightweight, hard-wearing, braided PVC hose. Incl. 2 m feeder hose.

Artikel

Opis	mera cevi	A (mm)	B (mm)	dolžina cevi (m)
K- 07 10 06 17	13 mm x 9,5 mm	394,5	436,0	14

Kljub skrbnemu preverjanju napak ne moremo izključiti in za informacije, ki so tu navedene, ne prevzemamo nobene odgovornosti.