K-BKR SERIE VALVE LINE

Stainless steel ball valves

Lastnosti

Obratovalni tlak	max. 70 bar, depending on temperature and nominal size
delovna temperatura	-15 °C to +110 °C, depending on port size and temperature
opis navoja	G thread acc. DIN EN ISO 228-1
tesnilo	PTFE
ročica	Stainless steel 1.4301
Material:	sealing: PTFE



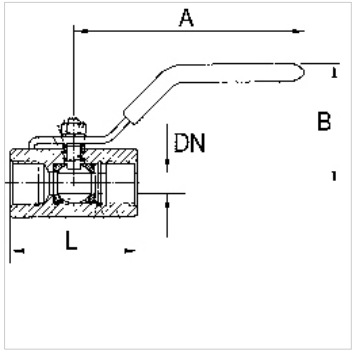

Navodilo

Drugi podatki na zahtevo.

Artikel

Opis	DN	Navoj	A (mm)	B (mm)	L (mm)	Material:
K- 07 30 15 24	13	1/4	99,5	47,0	47,5	Stainless steel 1.4408
K- 07 30 15 25	13	3/8	99,5	47,0	47,5	Stainless steel 1.4408
K- 07 30 15 26	15	1/2	99,5	48,0	58,0	Stainless steel 1.4408
K- 07 30 15 27	20	3/4	126,5	62,0	65,0	Stainless steel 1.4408
K- 07 30 15 28	25	1	126,5	69,0	77,0	Stainless steel 1.4408
K- 07 30 15 29	32	1 1/4	153,0	81,0	90,0	Stainless steel 1.4408
K- 07 30 15 30	38	1 1/2	153,0	87,0	98,5	Stainless steel 1.4408
K- 07 30 15 31	50	2	192,0	95,0	122,0	Stainless steel 1.4408

Kljub skrbnemu preverjanju napak ne moremo izključiti in za informacije, ki so tu navedene, ne prevzemamo nobene odgovornosti.