K-3 BKR L VA

3-way ball valves, L-bore

Lastnosti

Obratovalni tlak	max. 63 bar
delovna temperatura	max. 160 °C
Vrtina	Izvedba L
orientacijske vrednosti	Up to 40 °C: 63 bar, 150 °C: 28 bar
tesnilo	RTFE
ročica	Stainless steel
krogelna pipa	Stainless steel 1.4408



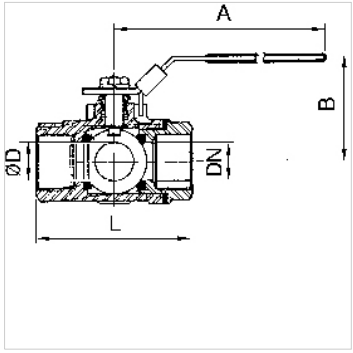

Navodilo

G thread acc. to DIN EN ISO 228-1, with ISO flange plate (acc. to ISO 5211)
Drugi podatki na zahtevo.

Opis

With L-bore, reduced bore. Version for sealing on all sides with integrated ISO flange plate (ISO 5211). The lever can be turned 360° to allow several switching variants.

Navodila za naročanje

For use on devices that have to be vented whenever they are turned off, either because of safety regulations or for technical reasons. The pneumatic devices are disconnected from the system and simultaneously vented each time they are shut off.

Dodatne informacije

G thread acc. DIN EN ISO 228-1

Artikel

Opis	DN	Navoj	A (mm)	B (mm)	L (mm)	Ø D (mm)
K- 07 30 15 02	8	G 1/4	114,0	73,0	80,0	11,0
K- 07 30 15 03	10	G 3/8	114,0	73,0	80,0	11,0
K- 07 30 15 04	15	G 1/2	114,0	73,0	80,0	12,5
K- 07 30 15 05	20	G 3/4	133,0	78,0	87,0	16,0
K- 07 30 15 06	25	G 1	133,0	83,0	100,0	20,0
K- 07 30 15 07	32	G 1 1/4	187,0	92,0	123,0	25,0
K- 07 30 15 08	40	G 1 1/2	187,0	98,0	142,0	31,8
K- 07 30 15 09	50	G 2	187,0	126,0	170,0	38,1

Kljub skrbnemu preverjanju napak ne moremo izključiti in za informacije, ki so tu navedene, ne prevzemamo nobene odgovornosti.