K-BKR EINTEILIG VA

Ball valves

Lastnosti

Obratovalni tlak	max. 55 bar (depending on connection size and temperature)
delovna temperatura	Max. 150 °C
tesnilo	PTFE
ročica	Stainless steel 1.4301

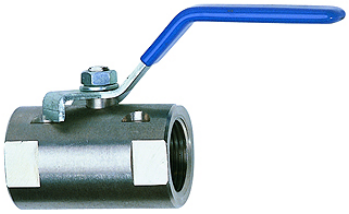

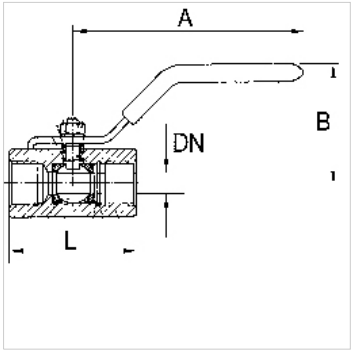

Navodilo

G thread acc. to DIN EN ISO 228-1, with ISO flange plate (acc. to ISO 5211)
Drugi podatki na zahtevo.

Opis

Full bore with G 1/4 to G 3/8, reduced bore with G 1/2 to G 2

Navodila za naročanje

For use on devices that have to be vented whenever they are turned off, either because of safety regulations or for technical reasons. The pneumatic devices are disconnected from the system and simultaneously vented each time they are shut off.

Artikel

Opis	DN	Navoj	A (mm)	B (mm)	L (mm)	Material:
K- 07 30 14 94	5	G 1/4	60,0	30,0	39,8	Stainless steel 1.4401/1.4408
K- 07 30 14 95	7	G 3/8	80,0	33,0	44,8	Stainless steel 1.4401/1.4408
K- 07 30 14 96	9	G 1/2	110,0	57,0	56,5	Stainless steel 1.4401/1.4408
K- 07 30 14 97	13	G 3/4	110,0	61,0	60,0	Stainless steel 1.4401/1.4408
K- 07 30 14 98	15	G 1	124,0	70,0	70,0	Stainless steel 1.4401/1.4408
K- 07 30 14 99	20	G 1 1/4	152,0	75,0	77,6	Stainless steel 1.4401/1.4408
K- 07 30 15 00	25	G 1 1/2	150,0	80,0	87,0	Stainless steel 1.4401/1.4408
K- 07 30 15 01	32	G 2	155,0	85,0	102,0	Stainless steel 1.4401/1.4408

Kljub skrbnemu preverjanju napak ne moremo izključiti in za informacije, ki so tu navedene, ne prevzemamo nobene odgovornosti.