K-ABBLV 2

Blow-off safety valves G 1/4

Lastnosti

Obratovalni tlak	0.5 - 60 bar
delovna temperatura	max. 180 °C
tesnila	FKM
ohišje	Brass



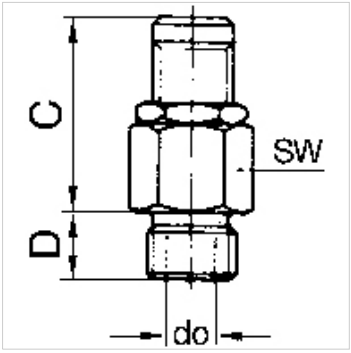

Navodilo

G thread acc. to DIN EN ISO 228-1, with ISO flange plate (acc. to ISO 5211)
Drugi podatki na zahtevo.

Opis

Manual adjustment of the blow-off pressure (lock nut).

Navodila za naročanje

For use on devices that have to be vented whenever they are turned off, either because of safety regulations or for technical reasons. The pneumatic devices are disconnected from the system and simultaneously vented each time they are shut off.

Dodatne informacije

These blow-off valves can also be supplied with a fixed setting and a TÜV type test number. Please ask for an offer.

Artikel

Opis	Navoj	Vklopni tlak	zmogljivost izpihovanja	C (mm)	D (mm)	do (mm)	SW (mm)
K- 07 30 29 18	G 1/4	0.5 - 1.0 bar	to 50 l/min	27,0	7,0	3,0	16
K- 07 30 21 95	G 1/4	1.0 - 4.0 bar	to 200 l/min	27,0	7,0	3,0	16
K- 07 30 21 96	G 1/4	3.0 - 7.0 bar	to 350 l/min	27,0	7,0	3,0	16
K- 07 30 21 97	G 1/4	6.0 - 12.0 bar	to 650 l/min	27,0	7,0	3,0	16
K- 07 30 21 98	G 1/4	10.0 - 18.0 bar	to 870 l/min	27,0	7,0	3,0	16
K- 07 30 21 99	G 1/4	16.0 - 32.0 bar	to 1600 l/min	27,0	7,0	3,0	16
K- 07 30 22 00	G 1/4	30.0 - 60.0 bar	to 3000 l/min	27,0	7,0	3,0	16

Kljub skrbnemu preverjanju napak ne moremo izključiti in za informacije, ki so tu navedene, ne prevzemamo nobene odgovornosti.