K-PRAEZIONSFILTERREGLER
Precision filter regulators

HANSA FLEX

Lastnosti

vstopni tlak	Max. 16 bar
temperatura medija	max. 60 °C
temperatura okolice	Max. 60 °C
Sredstva	Micro-filtered, unoiled compressed air (0.01 µm)
priključek za manometer	G 1/4
velikost por v filtrirnem elementu	10 µm
tesnilni material	NBR
ohišje	Die-cast zinc
lastna poraba zraka	0.01 l/min, depending on input pressure and control range



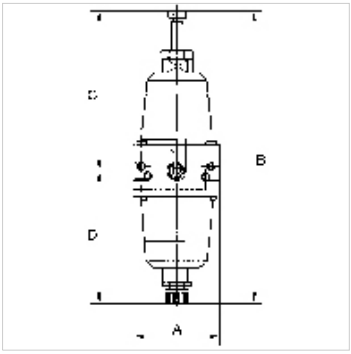

Navodilo

The given flow rates are based on the following parameters: 750 l/min: P1: 8 bar, P2: 2 bar, Δp ≤ 0.2 bar
750 l/min: P1: 8 bar, P2: 3 bar, Δp ≤ 0.5 bar
750 l/min: P1: 8 bar, P2: 5 bar, Δp ≤ 0.7 bar
Drugi podatki na zahtevo.

Opis

Diaphragm pressure regulators containing no non-ferrous metals, with selfrelieving design, combined with a centrifugal separator for applications requiring an extremely accurate working pressure.

Dodatne informacije

1500 l/min: P1: 10 bar, P2: 7 bar, Δp ≤ 0.1 bar.

Artikel

Opis	Navoj	regulacijsko območje	pretok (L/min)	A (mm)	B	C (mm)	D (mm)
K- 07 25 09 86	G 1/4	0.1 - 2 bar	750	60,0	216,0 mm	120,0	96,0
K- 07 25 09 87	G 1/4	0.1 - 3 bar	750	60,0	216,0 mm	120,0	96,0
K- 07 25 09 88	G 1/4	0.2 - 5 bar	750	60,0	216,0 mm	120,0	96,0

Nadomestni deli

K-HALTERBAUSATZ STANDARD	Holder
K-VERSCHLEI-SATZ	Set of wearing parts

Kljub skrbnemu preverjanju napak ne moremo izključiti in za informacije, ki so tu navedene, ne prevzemamo nobene odgovornosti.