K-PRAEZI DRG DRUCKVER HANSA

Precision pressure regulators with continuous pressure supply

Lastnosti

vstopni tlak	Max. 16 bar
območje temperatur:	-10 °C to +50 °C
Sredstva	stisnjen zrak
priključni navoj	Material: Die-cast zinc
ohišje	Material: Grivory® (PA 66)
membrana	NBR
lastna poraba zraka	2.6 l/min at P2 = 6 bar (depending on secondary pressure)
meritev pretoka	At P1 = 10 bar, P2 = 6.3 bar and pressure drop Δp = 1 bar



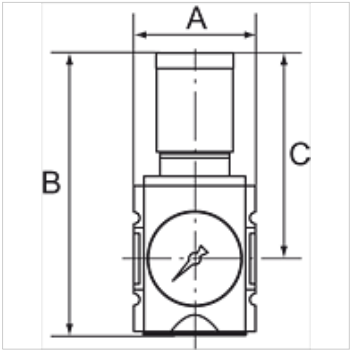

Navodilo

Drugi podatki na zahtevo.

Opis

Precision diaphragm pressure regulators with self-relieving design and excellent flow rates in modern design for mounting side by side.
By assembling two or more controllers together, it is possible to supply several working air circuits with different pressures via a single supply line.

Navodila za naročanje

The price does not include a key lock. Please order separately.

Artikel

Opis	Navoj	regulacijsko območje	pretok (L/min)	A (mm)	B	C (mm)
K- 07 25 09 66	G 1/4	0.1 - 1 bar	2200	52,0	128,5 mm	95,5
K- 07 25 09 67	G 1/4	0.1 - 2 bar	2200	52,0	128,5 mm	95,5
K- 07 25 09 68	G 1/4	0.2 - 4 bar	2200	52,0	128,5 mm	95,5
K- 07 25 09 69	G 1/4	0.5 - 8 bar	2200	52,0	128,5 mm	95,5
K- 07 25 09 70	G 1/4	0.5 - 10 bar	2200	52,0	128,5 mm	95,5
K- 07 25 09 71	G 3/8	0.1 - 1 bar	2700	52,0	128,5 mm	95,5
K- 07 25 09 72	G 3/8	0.1 - 2 bar	2700	52,0	128,5 mm	95,5
K- 07 25 09 73	G 3/8	0.2 - 4 bar	2700	52,0	128,5 mm	95,5
K- 07 25 09 74	G 3/8	0.5 - 8 bar	2700	52,0	128,5 mm	95,5
K- 07 25 09 75	G 3/8	0.5 - 10 bar	2700	52,0	128,5 mm	95,5
K- 07 25 09 76	G 3/8	0.1 - 1 bar	4300	63,0	149,5 mm	110,0
K- 07 25 09 77	G 3/8	0.1 - 2 bar	4300	63,0	149,5 mm	110,0
K- 07 25 09 78	G 3/8	0.2 - 4 bar	4300	63,0	149,5 mm	110,0
K- 07 25 09 79	G 3/8	0.5 - 8 bar	4300	63,0	149,5 mm	110,0
K- 07 25 09 80	G 3/8	0.5 - 10 bar	4300	63,0	149,5 mm	110,0
K- 07 25 09 81	G 1/2	0.1 - 1 bar	5000	63,0	149,5 mm	110,0
K- 07 25 09 82	G 1/2	0.1 - 2 bar	5000	63,0	149,5 mm	110,0
K- 07 25 09 83	G 1/2	0.2 - 4 bar	5000	63,0	149,5 mm	110,0
K- 07 25 09 84	G 1/2	0.5 - 8 bar	5000	63,0	149,5 mm	110,0
K- 07 25 09 85	G 1/2	0.5 - 10 bar	5000	63,0	149,5 mm	110,0

Pribor

K-STECKSCHLOSS	Key lock

Nadomestni deli

K-HALTERBAUSATZ HANSA	Holder HANSA
K-SCHALTTAFELMUTTER HANSA	Nut HANSA
K-DICHTSATZ HANSA	Set of seals HANSA

Kljub skrbnemu preverjanju napak ne moremo izključiti in za informacije, ki so tu navedene, ne prevzemamo nobene odgovornosti.